EVSE ADAPTER TYP 1/2
PCE-EVSE 310

GB

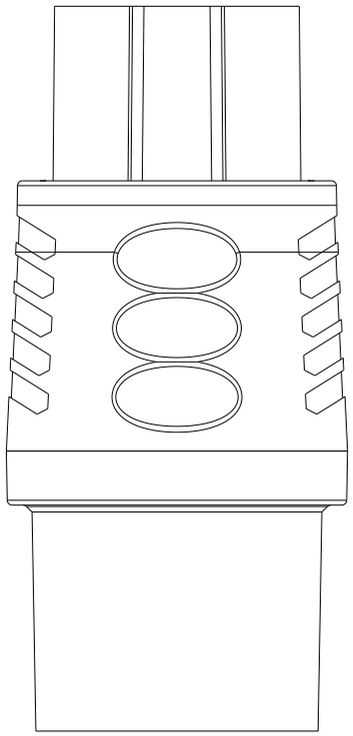

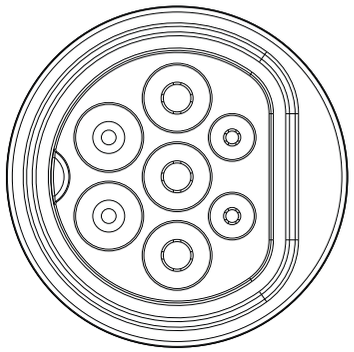

Content

1.0 Introduction / Product Package

2.0 Preparation for tests

3.0 Technical data

4.0 Cleaning and storage

Referces marked on tester or in instruction manual:

⚠ DLRIDSRWHWLDGDHRPSLWLVWWLRPDD

☞ HIHLH3HDVHSDWPRVWDWWHWLR

⚠ DWLRDHRVRWDHDHRIHHWLDVR

RWLRVGREHRLLIRLGLVDWLRRPSLHVLWDWH RU,,,11

CE RIRPLWVPERWHLVWPHWRPSLHVLWWHDLGGLH WHV,WRPSLHVLWWH0 LH WLH,WDVR RPSLHVLWWH/R9RWDHLHWLH

HVWHRPSLHVLWWHVWDGDG

⚠ ⚠ Warning

Prevent danger of electric shock and other dangers:

⚠ HDGDSWHDHEHHRVWWHGDGWHVWHGLDRGDH LWWHDSSRSLDWHVDIHWHDWLRVDGDVHIWWHIDWRU LDVDIHDGSHIHWRGLWLR

⚠ HRSHDWLLVWWLRVRWDLLIRPDWLRDGHIHHHV HTLHGIRVDIHRSHDWLRDGVHRIWHDGDSWHHIRHVL WHDGDSWHHDGWHRSHDWLLVWWLRVDHIDGIRR WHPLDHVSHWV2WHLVHSRWHWLRPDEHLPSDLHG

⚠ RDRLGDHHWLVRREVHHWHSHDWLRVHRU L LWRWDHVHHHGL99R00HII ,DRGDHLW,19WHVHDHVHSHVHWWH WHVRGRWDWRWDHVDHVLEDHWVHIHWRLPLWHG DHVHLDLWDDHDV

⚠ HIRHVLWHDGDSWHHVHWDWWHGHLHLVLSHIHW RU LRGHRRRWHIRHRHRVL

⚠ The adapter may be used only within the speci ied measure ment ran es and in low olta e installations up to

⚠ The adapter may be used only in the measurin circuit cate ory it has been desi ned or

⚠ t is not permitted to use the adapter durin rain or precipitation

⚠ e ore and a ter use always chec that the adapter is in per ect wor in order e on a nown olta e source

⚠ the sa ety o the user cannot be uaranteed the adapter must not be used anymore

⚠ a ety is no lon er uaranteed e in the ollowin cases

2EL RVDPD

R RVLDVLRVL

R IRRRRLDRDERLLRV

DPD LDVR

⚠ DPVERDEDLVVR

⚠ 1VDDLRVLLRP

⚠ DDPDERDDRLVLL LD R

☞ DDRVRH

☞ DDLVVLIRVRVRDLRVL D DLVRRVVLE

1.0 Introduction / Product Package

DDLVDLDEDDRRLVVEDL RDERRDVLL RRLLDDLVDLR

The type-2-type-1 adapter is characterized by the following features:

HVLHGWRPHHWLWHDWLRDVDIHWVWDGDG1

0HDVHPHWDWHR,

3R WLRGHHH

After unpacking, check that the instrument is undamaged.

The product package comprises:

S9SHDGDSWHU

SVHPDD

2.0 Preparation for tests

If a type-1 charging station shall be tested with a test device with type-2 plug, proceed as follows:

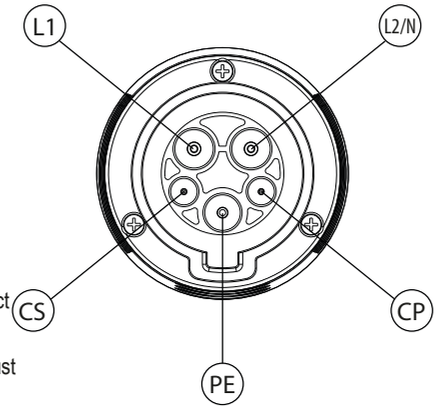

3.0 Technical data

RDD	
TD	
0DLPP	
2 DLLP	R LRV
P D	RDLRTVR D1RRVDLR
PLL	0D
L	R P
2RD	
DD	1

4.0 Cleaning and storage

⚠ DRVRDVLDPDLDLIVDR L RVPDD

⚠ PRDDIRPDVRLVEIRDL

⚠ VDLDPRLDIRDL LVPRRVDEDVLVRVRV

⚠ RRRVLVPRLVLLPD DPLLRID

PCE Instruments UK Ltd.
Suite 2.08, Trafford House
Chester Rd, Old Trafford, Manchester
United Kingdom, M32 0RS
info@pce-instruments.co.uk
.pce-instruments.com