SD card real time data recorder
with harmonic measurement

3 PHASE Power Meter PCE-PA 8300

PCE Americas Inc.
711 Commerce Way
Suite 8
Jupiter
FL-33458
USA
From outside US: +1
Tel: (561) 320-9162
Fax: (561) 320-9176
info@pce-americas.com

PCE Instruments UK Ltd.
Units 12/13
Southpoint Business Park
Ensign way
Hampshire / Southampton
United Kingdom, SO31 4RF
From outside UK: +44
Tel: (0) 2380 98703 0
Fax: (0) 2380 98703 9
info@pce-instruments.com

www.pce-instruments.com/english
www.pce-instruments.com

Your purchase of this 3 PHASE POWER ANALYZER marks a step forward for you into the field of precision measurement. Although this POWER ANALYZER is a complex and delicate instrument, its durable structure will allow many years of use if proper operating techniques are developed. Please read the following instructions carefully and always keep this manual within easy reach.

OPERATION MANUAL

Caution Symbol

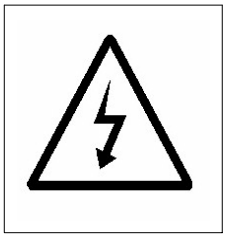

Caution :

*** Risk of electric shock !**

*** During the measurement, do not open the cabinet.**

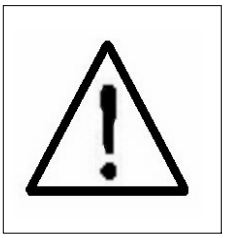

Caution :

*** Do not apply the overload voltage, current to the input terminal !**

*** Remove test leads before open the battery cover !**

*** Cleaning - Only use the dry cloth to clean the plastic case !**

Environment Conditions

* Installation Categories III 600V.

* Pollution Degree 2.

* Altitude up to 2000 meters.

* Indoor use.

* Relative humidity 80% max.

TABLE OF CONTENTS

1. FEATURES.....1

2. SPECIFICATIONS.....2
   2-1 General Specifications.....2
   2-2 Electrical Specifications.....5

3. FRONT PANEL DESCRIPTION.....10

4. MEASURING PREPARATION 13
   4-1 The original screen.....13
   4-2 Entry the measurement Screen..... 13
   4-3 The summary description of keyboard..... 15
   4-4 SETUP KEY description..... 16
   4-5 Setting function description before measuring..... 17

5. MEASURING PROCEDURES 46
   5-1 1Φ 2W (one phase by two wires) measurement.....46
   5-2 1Φ 3W (one phase by three wires) measurement.....47
   5-3 3Φ 3W (three phase by three wires) measurement.....49
   5-4 3Φ 4W (three phase by four wires) measurement.....50
   5-5 The CT and PT measurement.....52
   5-6 ZERO adjustment for Watt Hour.....53
   5-7 Harmonic Function Measurement 54
   5-8 Graphic Phasor Diagram..... 56
   5-9 Voltage/Current Waveform.....58
   5-10 Transient Capture (Dips, Swells, Outage)..... 60
   5-11 Data Logger function.....63
   5-12 Data Hold function..... 65

5-13 Backlight key.....66
5-14 A (Current) Range key.....66
5-15 LOWBAT screen..... 67
5-16 Appendix 1.....68

6. MAINTENANCE..... 69
6-1 Cleaning.....69
6-2 Replacement of batteries 69

7. RS232 PC SERIAL INTERFACE.....70

8. Download the saving data from the SD card to
the computer (EXCEL software) 72

9. PATENT.....76

10. THE ADDRESS OF AFTER SERVICE CENTER 77

1. FEATURES

* Analysis for 3 phase multi-power system, 1P/2W, 1P/3W, 3P/3W, 3P/4W.
* 3 current probes (CP-1201) are included, if change the current probes, the calibration procedures are not necessary.
* Current probe input signal/ranges with selection :
  Input signal (ACV) :
  200 mV/300 mV/500 mV/1 V/2 V/3 V.
  Ranges (ACA) :
  20 A/200 A/2000 A/30 A/300 A/ 3000 A.
* Meter can cooperate the universal current probes.
* Complete set with 4 PCs Test Leads, 4 PCs Alligator clips, 3 PCs Clamp Probe (CP 1201), AC to DC 9V adapter, 2 G SD memory card and Carrying bag.
* Measurement :
  V (phase-to-phase), V (phase-to-ground)
  A (phase-to-ground)
  KW / KVA / KVAR / PF (phase)
  KW / KVA / KVAR / PF (system)
  KWH / KVAH / KVARH / PFH (system)
  Phase angle
* Harmonics display (1-50th order).
* Simultaneous display of Harmonics and Wave form.
* Display of Waveform with Peak Values.
* Analysis of Total Harmonic Distortion (THD).
* Graphic Phase diagram with 3-Phase system parameters.
* 3 phase Voltage or Current Unbalanced Ratio (VUR, AUR) and Unbalanced Factor.
* Calculated Unbalanced Current through Neutral Line (An)
* Capture Transient events (including Dip, Swell and Outage) with programmable threshold (%).
* Programmable CT ratio (1 to 600) and PT ratio (1 to 1000).

* ACV input impedance is 10 Mega ohms.
* Safety Standard : IEC 1010, CAT III 600V.
* Built-in clock and Calendar, real time data record with SD memory card , sampling time set from 2 to 7200 seconds. Just slot in the SD card into the computer, it can down load the all the measured value with the time information (year, month, data, hour, minute, second) to the Excel directly, then user can make the further data analysis by themselves.
* Powered by AA (UM-3) DC 1.5 V X 8 batteries (Alkaline type) or DC 9V adapter.
* Computer data output, can cooperate with optional USB Cable/USB-01, RS232 cable/UPCB-02 and Data Acquisition software, SW-811.
* Optional current probes : CP-1201, CP-2000, CP-200, CP-3000, detail specification.
* User can order the meter only (without the current probes) with the special request as intend to cooperate their own current probes.
* Patented.

2. SPECIFICATIONS

2-1 General Specifications:

Circuit	Custom one-chip of microprocessor LSI circuit
Display	* LCD Size : 81.4 X 61 mm (3.2 X 2.4 inch) * Dot Matrix LCD (320 X 240 pixels) with back light.

Measurement	* V (phase-to-phase) * V (phase-to-ground) * A (phase-to-ground) * KW / KVA / KVAR / PF (phase) KW / KVA / KVAR / PF (system) KWH / KVAH / KVARH / PFH (system) * Power factor * Phase angle * Frequency * Harmonics display.	
Wire connections	1P/2W, 1P/3W, 3P/3W, 3P/4W.	
Voltage ranges	10 ACV to 600 ACV, auto range.	
Current probe input signal and range	* Current probe input signal volage (ACV) : *200mV/300mV/500mV/1V/2V/3V.* * Current probe input current range (ACA) : *20 A/200A/2000A (1200 A)/30A/300A/3000A* * Meter can cooperate the universal current probe.	
Safety standard	IEC1010 CAT III 600 V.	
ACV input impedance	10 Mega ohms.	
Range select	ACV	Auto range.
	ACA	Manual range.
Clamp frequency response	40 Hz to 1 KHz.	
Spec. tested frequency	45 to 65 Hz.	
Over load protection	ACV	720 ACV rms
	ACA	1300 ACA with clamp probe ** For the Clamp ,CP-1201*
Over Indicator	* LCD display show " OL ". * The data save into the SD card will show " 9999 " or " 999 "(overleap the decimal point).	

Under Indicator	* LCD display show " UR ". * The data save into the SD card will show " 9999 " or " 999 "(overleap the decimal point).
Data Hold	Freeze the display reading.
Data Record	SD Card Record.
Sampling Time	Approx. 1 second.
Power ON/OFF	Manual OFF by push button.
Real time data logger	* Real time data logger, saved the data into SD memory card and down load the all the measured value with the time information (year/month/data/ hour/minute/second) down load to the Excel
	* Integration time for data logger : 2 seconds to 7200 seconds, the during of setting step are 2 seconds.
Data Output USB/RS232 ** Computer interface*	RS232 computer serial interface : * Connect the optional USB cable USB-01 will get the USB plug. * Connect the optional RS232 cable UPCB-02 will get the RS232 plug.
Operating Temperature	0 to 50℃ (32 to 122℉).
Operating Humidity	Less than 80% R.H..
Power Supply	* DC 1.5V, AA (UM-3) Battery X 8 PCs (Alkaline or heavy-duty battery). * AC to DC 9V power adapter.
Power Consumption	* Meter : 270 DCmA. * Clamp : 22 DCmA.
Clamp max. conductor Size	50 mm (2.0 inch) Dia. ** For the Clamp ,CP-1201*

Weight	* Meter : 1010g (includes batteries) * Clamp (includded cable) : 500g
Dimension	*Meter :* 225 X 125 X 64 mm (8.86 X 4.92 X 2.52 inch)
	Clamp : 210 X 64 X 33mm (8.3 X 2.5 X 1.3 inch)
	Clamp Jaw : 86 mm (3.4 inch)- outside
Accessories Included	* Instruction manual..... 1 PC * Test Leads (TL88-4AT)..... 1 Set (4 PCs) * Alligator clips (TL88-4AC) 1 Set (4 PCs) * Clamp Probe (CP-1201)..... 3 PCs * AC to DC 9V adapter.....1 PC * SD card (2 G)..... 1 PC * Carrying bag..... 1 PC
Optional Accessories	* 2000 Amp current probe, CP-2000 * 200 Amp current probe, CP-200 * Flexible 3000 Amp current probe, CP-3000 * USB Cable , USB-01 * RS232 cable, UPCB-02 * Data Acquisition software, SW-U811 * EXCEL Data Acquisition software, SW-E802

2-2 Electrical Specifications:

ACV

Range	***Resolution***	***Accuracy***
10.0V to 600.0V ** Phase to neutral line*	0.1V	± (0.5%+0.5V)
10.0V to 600.0V ** Phase to phase*		

ACA

Range	*Resolution*	*Accuracy*
20A	0.001A, *< 10 A* 0.01A, *≧ 10 A*	± (0.5%+0.1A)
200A	0.01A, *< 100 A* 0.1A, *≧ 100 A*	± (0.5%+0.5A)
1200A	0.1A, *< 1000 A* 1A, *≧ 1000 A*	± (0.5%+5A)

Power factor

Range	*Resolution*	*Accuracy*
0.00 to 1.00	0.01	± 0.04

Remark :

*** PFH : Long term power factor**

*** PFΣ :**

For 3Φ 4W, 3Φ 3W

PFΣ = (PF1 + PF2 + PF3)/3

For 1Φ 3W

PFΣ = (PF1 + PF2)/2

Φ (Phase angle)

Range	*Resolution*	*Accuracy*
-180° to 180°	0.1°	± 1° ** ACOS (PF)*

Frequency

Range	*Resolution*	*Accuracy*
45 to 65 Hz	0.1 Hz	0.1 Hz

Active (Real) Power

Range	***Resolution***	*Accuracy*
0.000 to 9.999 KW	*0.001/0.01/0.1 KW	± (1%+0.008KW)
10.00 to 99.99 KW	*0.01/0.1 KW	± (1%+0.08KW)
100.0 to 999.9 KW	0.1 KW	± (1%+0.8KW)
1.000 to 9.999 MW	0.001 MW	± (1%+0.008MW)

** : The resolution is changed according the different ACA range.*

Apparent Power

Range	***Resolution***	***Accuracy***
0.000 to 9.999 KVA	*0.001/0.01/0.1KVA	± (1%+0.008KVA)
10.00 to 99.99 KVA	*0.01/0.1 KVA	± (1%+0.08KVA)
100.0 to 999.9 KVA	0.1 KVA	± (1%+0.8KVA)
1.000 to 9.999 MVA	0.001 MVA	± (1%+0.008MVA)

** : The resolution is changed according the different ACA range.*

Reactive Power

Range	***Resolution***	***Accuracy***
0.000 to 9.999 KVAR	*0.001/0.01/0.1KVAR	± (1%+0.008 KVAR)
10.00 to 99.99 KVAR	*0.01/0.1 KVAR	± (1%+0.08 KVAR)
100.0 to 999.9 KVAR	0.1 KVAR	± (1%+0.8 KVAR)
1.000 to 9.999 MVAR	0.001 MVAR	± (1%+0.008 MVAR)

** : The resolution is changed according the different ACA range.*

Watt Hour (Active Power Hour) : WH

Range	***Resolution***	***Accuracy***
0.000 to 9.999 KWH	0.001 KWH	± (2%+0.008 KWH)
10.00 to 99.99 KWH	0.01 KWH	± (2%+0.08 KWH)
100.0 to 999.9 KWH	0.1 KWH	± (2%+0.8 KWH)
1.000 to 9.999 MWH	0.001 MWH	± (2%+0.008 MWH)

VA Hour (Apparent Power Hour) : SH

Range	***Resolution***	***Accuracy***
0.000 to 9.999 KVAH	0.001 KVAH	± (2%+0.008 KVAH)
10.00 to 99.99 KVAH	0.01 KVAH	± (2%+0.08 KVAH)
100.0 to 999.9 KVAH	0.1 KVAH	± (2%+0.8 KVAH)
1.000 to 9.999 MVAH	0.001 MVAH	± (2%+0.008 MVAH)

VAR Hour (Reactive Power Hour) : QH

Range	***Resolution***	*Accuracy*
0.000 to 9.999 KVARH	0.001 KVARH	± (2%+0.008 KVARH)
10.00 to 99.99 KVARH	0.01 KVARH	± (2%+0.08 KVARH)
100.0 to 999.9 KVARH	0.1 KVARH	± (2%+0.8 KVARH)
1.000 to 9.999 MVARH	0.001 MVARH	± (2%+0.008 MVARH)

Harmonics of AC voltage in Magnitude

** Fundamental frequency 50 Hz, 60 Hz*

Range	***Resolution***	*Accuracy*
1 to 20th	0.1 V	± (2 % + 0.5 V)
21 to 30th		± (4 % + 0.5 V)
31 to 50th		reference

Harmonics of AC voltage in Percentage

** Fundamental frequency 50 Hz, 60 Hz*

Range	***Resolution***	*Accuracy*
1 to 20th	0.1 %	± (2 % + 10 d)
21 to 30th		± (4 % + 20 d)
31 to 50th		reference

Harmonics of AC current in Magnitude

** Fundamental frequency 50 Hz, 60 Hz*

Range	***Resolution***	*Accuracy*
1 to 20th	0.1 A	± (2 % + 0.5 A)
21 to 30th		± (4 % + 0.5 A)
31 to 50th		reference

Harmonics of AC current in Percentage

** Fundamental frequency 50 Hz, 60 Hz*

Range	***Resolution***	*Accuracy*
1 to 20th	0.1 %	± (2 % + 10 d)
21 to 30th		± (4 % + 20 d)
31 to 50th		reference

Peak value of ACV or ACA

Range	***Sample Time***	*Accuracy*
50 Hz	19 us	± (5 % + 30 d)
60 Hz	16 us	
** us = micro seconds*		

Crest Factor of ACV or ACA

Range	***Resolution***	*Accuracy*
1.000 - 9.999	0.001	± (5 % + 0.3)

Total Harmonic Distortion

Range	***Resolution***	*Accuracy*
0 to 20 %	0.1 %	± (2 % + 5 d)
20.1 to 100 %		± (6 % + 10 d)

3. FRONT PANEL DESCRIPTION

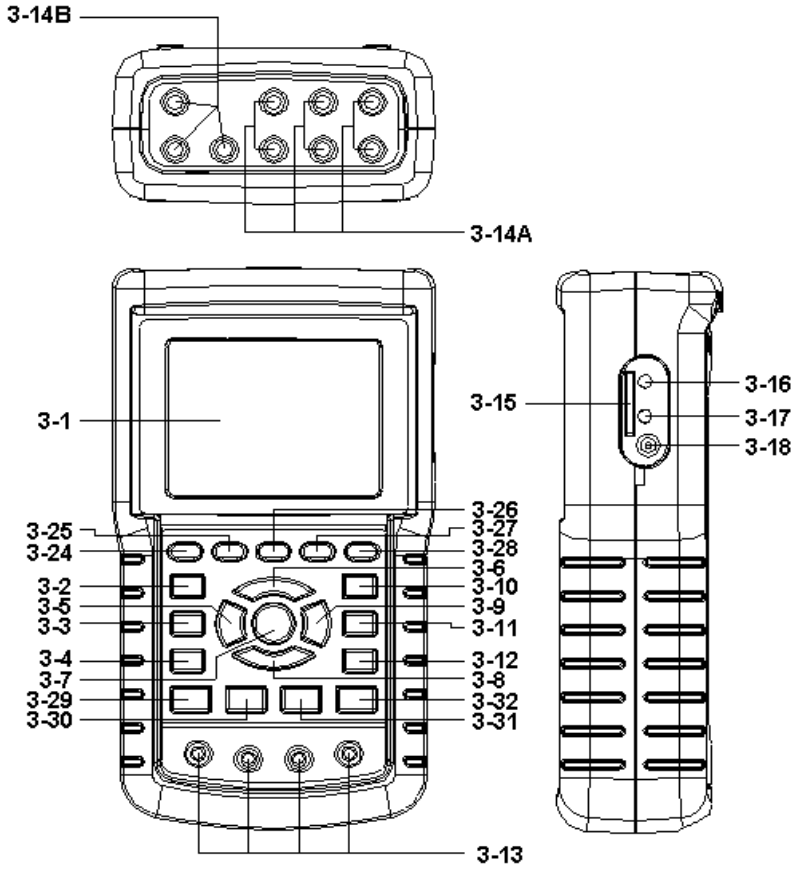

Fig. 1

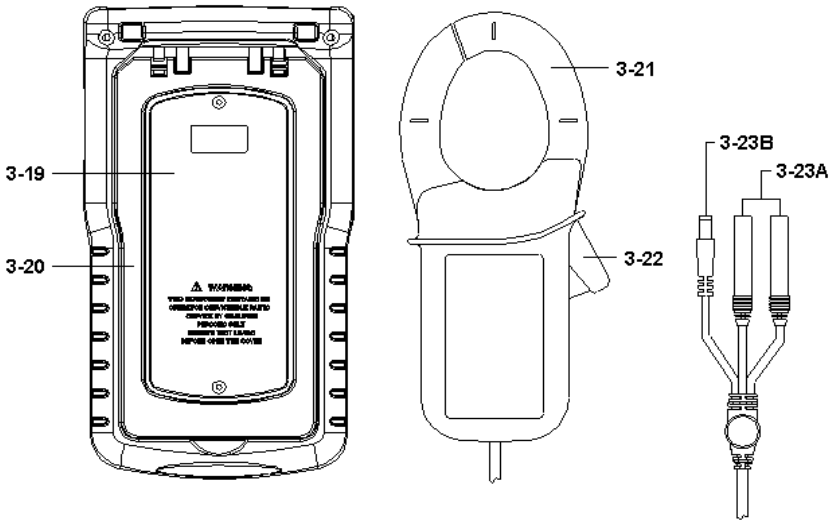

3-1 Display
3-2 1Φ 3Φ (Phase/wire) key button
3-3 ▲ key button
3-4 ▼ key button
3-5 Hold key button
3-6 Backlight key button
3-7 Power key button
3-8 Exit key button
3-9 REC key button
3-10 A (current) range key button
3-11 Shift key button
3-12 Setup key button
3-13 Voltage input terminals
3-14A Current probe signal input sockets
3-14B Current probe power sockets
3-15 SD card socket
3-16 RS232 socket
3-17 Reset button
3-18 DC 9V power adapter socket
3-19 Battery Cover/Battery compartment
3-20 Stand
3-21 Current Sense Jaw
3-22 Trigger
3-23A Current probe signal plugs
3-23B Current probe power plug

3-24 Harmonic Analysis Left Key
3-25 Harmonic Key
3-26 Harmonic Analysis Right Key
3-27 Harmonic Analysis V1,V2,V3, A1,A2,A3 Select Key
3-28 Harmonic Function Voltage or Current Input Range
3-29 Power Measurement Key
3-30 Phase Diagram Key
3-31 Waveform of Voltage and Current Key
3-32 Transient Key

4. MEASURING PREPARATION

4-1 The original screen

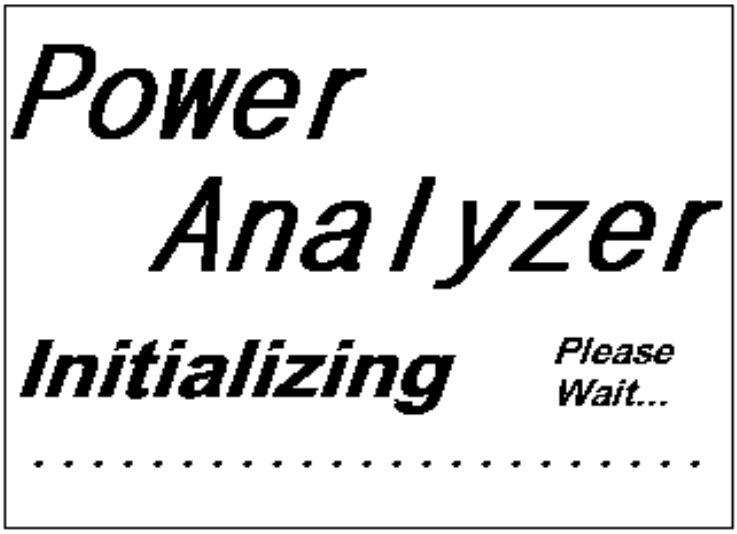

4-2 Entry the measurement Screen

1) The bottom right display of screen 1 will show as " SD Check " along with blinking while inserting SD CARD then disappears after several seconds that indicates the data from SD CARD has been read completed.
2) The bottom right display of screen 2 will show as " NO DISK " along with blinking when SD CARD is not inserted.

screen 1 (4-2)

V12:	0.0 V	**V1:**	0.0 V	**A1:**	0.00 A
V23:	0.0 V	**V2:**	0.0 V	**A2:**	0.00 A
V31:	0.0 V	**V3:**	0.0 V	**A3:**	0.00 A
P1:	-0.000 KW	**S1:**	0.000KVA	**Q1:**	-0.000 KVAR
P2:	-0.000 KW	**S2:**	0.000KVA	**Q2:**	-0.000 KVAR
P3:	-0.000 KW	**S3:**	0.000KVA	**Q3:**	-0.000 KVAR
PΣ :	-0.000 KW	**SΣ :**	0.000KVA	**QΣ :**	-0.000 KVAR
PF1:	-0.00	**PF 2:**	-0.00	**PF 3:**	-0.00
PFΣ :	0.00	**PF H:**	0.00		
Φ1:	- 0.0°	**Φ2:**	- 0.0°	**Φ3:**	- 0.0°
WH:	0.000 KWH	**SH:**	0.000KVAH		
QH:	0.000 KVARH	**FREQ:**	0.0 Hz		

CP1201 20A | **3Φ4W** | **SEC: 2** | **CT: 1** | **PT: 1** | **SD Check**

screen 2 (4-2)

V12:	0.0 V	**V1:**	0.0 V	**A1:**	0.00 A
V23:	0.0 V	**V2:**	0.0 V	**A2:**	0.00 A
V31:	0.0 V	**V3:**	0.0 V	**A3:**	0.00 A
P1:	-0.000 KW	**S1:**	0.000KVA	**Q1:**	-0.000 KVAR
P2:	-0.000 KW	**S2:**	0.000KVA	**Q2:**	-0.000 KVAR
P3:	-0.000 KW	**S3:**	0.000KVA	**Q3:**	-0.000 KVAR
PΣ :	-0.000 KW	**SΣ :**	0.000KVA	**QΣ :**	-0.000 KVAR
PF1:	-0.00	**PF 2:**	-0.00	**PF 3:**	-0.00
PFΣ :	0.00	**PF H:**	0.00		
Φ1:	- 0.0°	**Φ2:**	- 0.0°	**Φ3:**	- 0.0°
WH:	0.000 KWH	**SH:**	0.000KVAH		
QH:	0.000 KVARH	**FREQ:**	0.0 Hz		

CP1201 20A | **3Φ4W** | **SEC: 2** | **CT: 1** | **PT: 1** | **NO DISK**

4-3 The summary description of keyboard

1) POWER KEY (3-7, Fig. 1) :
   Press the key to turn the instrument ON/OFF.
2) 1Φ 3Φ (phase/wire) KEY (3-2, Fig. 1) :
   Press the key to select
   (1P/2W、1P/3W、3P/3W、3P/4W) measurement function mode.
3) A (current) RANGE KEY (3-10, Fig. 1) :
   Press the key to change the current range quickly.
4) REC KEY (3-9, Fig. 1) :
   The data record key for SD CARD.
5) HOLD KEY (3-5, Fig. 1) :
   Press the key to freeze the display reading.
6) BACKLIGHT KEY (3-6, Fig. 1) :
   Press the key to switch LCD backlight to ON/OFF.
7) SETUP KEY (3-12, Fig. 1) :
   Press the key to setup the function before measuring.
8) EXIT KEY (3-8, Fig. 1) :
   Press the key to exit setting screen.
9) SHIFT KEY (3-11, Fig. 1)
   Press the key to set the different functions in setting screen.
10) UP (▲) KEY (3-3, Fig. 1) :
    Press the key to move the cursor up in setting screen.
11) DOWN (▼) KEY (3-4, Fig. 1) :
    Press the key to move the cursor down in setting screen.
12) Harmonic Analysis Left Key (3-24, Fig. 1)
13) Harmonic Key (3-25, Fig. 1)
14) Harmonic Analysis Right Key (3-26 , Fig. 1)
15) Harmonic Analysis V1,V2,V3, A1,A2,A3
    Select Key (3-27, Fig. 1)
16) Harmonic Function Voltage or Current
    Input Range Select Key (3-28, Fig. 1)
17) Power Measurement Key (3-29, Fig. 1)
18) Phase Diagram Key (3-30, Fig. 1)
19) Waveform of Voltage and Current Key (3-31, Fig. 1)
20) Transient Key (3-32, Fig. 1)

4-4 SETUP KEY description:

4-4-1 SHIFT KEY

* SHIFT 1 : When the symbols " SETUP " and " SHIFT 1 " are appeared on up right display of screen 1 in the meantime, and then use the ▲ or ▼ to select the expect item.
* SHIFT 2 : When the symbols " SETUP " and " SHIFT 2 " are appeared on up right display of screen 2 in the meantime, and then use the ▲ or ▼ to select (1P/2W、1P/3W、3P/3W、3P/4W) in File Name function.

```
Folder Name:        WTA01                          SETUP
File Name:      3P401001.XLS                       SHIFT 1
REC Date:     2008-11-28 00:03:17
Sampling Time:          2          Trans Ref  :    220.0 V
Delet File:             0  %       SDVP :            10%
SD Format:              0  %       Decimal:         Basic
Use Size:             388   KB     Clamp Type:    CP1201
Free Size:            1946 MB      A       Range:   200A
Total Size:           1946 MB      V       Range:    200mV
                                   RS232 Out Sel:
PT:                   1 : 1        V1      I1       P1
CT:                   1 : 1        S1      Q1       PF1
Beep:    ON                        Φ1      FREQ

Year    Month     Date    Hour    Minute    Second
2010    11        13      14      37        25
```

screen 1 (4-4)

```
Folder Name:        WTA01                          SETUP
File Name:      3P401001.XLS                       SHIFT 2
REC Date:     2008-11-28 00:03:17
Sampling Time:          2          Trans Ref  :    220.0 V
Delet File:             0  %       SDVP :            10%
SD Format:              0  %       Decimal:         Basic
Use Size:             388   KB     Clamp Type:    CP1201
Free Size:            1946 MB      A       Range:   200A
Total Size:           1946 MB      V       Range:    200mV
                                   RS232 Out Sel:
PT:                   1 : 1        V1      I1       P1
CT:                   1 : 1        S1      Q1       PF1
Beep:    ON                        Φ1      FREQ

Year    Month     Date    Hour    Minute    Second
2010    11        13      14      37        25
```

screen 2 (4-4)

4-4-2 The Setting Function menu

* Folder Name : Set the expect folder name for SD CARD, the range is between WTA01 and WTA10.
* File Name: Set the file name for SD CARD, It allows setting 50 filenames in this function.
* REC Date: Show the recorded time of existing files (Year/Month/Date, Hour/Min./Sec.)
* Sampling Time : Set the sampling time from 2 to 7200 seconds.
* Delete File : To delete the existing data from SD CARD.
* SD Format : to Format SD CARD fast.
* PT : Set the potential transformer from 1 to 1000.
* CT : Set the current transformer from 1 to 600.
* Beep : Set to ON/OFF for buzzer.
* Clamp Type : Select the Clamp Type to CP-1201, CP-200 CP-2000, CP-3000 or Other Type.
* RS232 out Sel. : Set RS232 output function, maximum up to nine items can be selected to output. screen 1 screen 2.
* Year : Set the year.
* Month : Set the month.
* Date : Set the date.
* Hour : Set the hour.
* Minute : Set the minute.
* Second : Set the second.

4-5 Setting function description before measuring

Press SETUP KEY to enter setting function screen, the selected item will be displayed in highlight.

4-5-1 Folder Name: Set the folder name for SD

screen 1 (4-5-1)

Folder Name:	WTA01					**SETUP**
File Name:	3P401001.XLS					
REC Date:	2008-11-28 00:03:17					
Sampling Time:	2	Trans Ref :	220.0 V			
Delet File:	0 %	SDVP :	10%			
SD Format:	0 %	Decimal:	Basic			
Use Size:	388 KB	Clamp Type:	CP1201			
Free Size:	1946 MB	A	Range:	200A		
Total Size:	1946 MB	V	Range:	200mV		
		RS232 Out Sel:				
PT:	1 : 1	V1	I1	P1		
CT:	1 : 1	S1	Q1	PF1		
Beep: ON		Φ1	FREQ			
Year	Month	Date	Hour	Minute	Second	
2010	12	05	11	14	49	

screen 2 (4-5-1)

Folder Name:	WTA01					**SETUP**
File Name:	3P401001.XLS					**SHIFT 1**
REC Date:	2008-11-28 00:03:17					
Sampling Time:	2	Trans Ref :	220.0 V			
Delet File:	0 %	SDVP :	10%			
SD Format:	0 %	Decimal:	Basic			
Use Size:	388 KB	Clamp Type:	CP1201			
Free Size:	1946 MB	A	Range:	200A		
Total Size:	1946 MB	V	Range:	200mV		
		RS232 Out Sel:				
PT:	1 : 1	V1	I1	P1		
CT:	1 : 1	S1	Q1	PF1		
Beep: ON		Φ1	FREQ			
Year	Month	Date	Hour	Minute	Second	
2010	12	05	11	14	34	

A : Folder Name range: WTA01 to WTA10.
B : Press ▲ or ▼ to select the expect folder number, the number consists of " 01 to 10 " (as screen 1).
C : Press ▲ or ▼ continuously at least two seconds can skip the numbers faster.
D : Press SHIFT KEY once, the symbol " SHIFT1" will appear on up right display, and then press ▼ to entry next setting function as screen 2 (Folder Name → File Name).

4-5-2 File Name: Set the file name for SD

A : The screen will show " NO File " indicator in REC Date option when the selected file is new (as screen 1).
B : The screen will show recording date and time in REC Date option when the selected file has been recorded as screen 2.

screen 1 (4-5-2)

```
Folder Name:     WTA03                                   SETUP
File Name:    3P401001.XLS
→ REC Date:    NO File
Sampling Time:          2      Trans Ref  :     220.0 V
Delet File:           0  %     SDVP :           10%
SD Format:            0  %     Decimal:        Basic
Use Size:           388   KB   Clamp Type:     CP1201
Free Size:         1946 MB     A      Range:      200A
Total Size:        1946 MB     V      Range:    200mV
                               RS232 Out Sel:
PT:                1 : 1       V1     I1       P1
CT:                1 : 1       S1     Q1       PF1
Beep:   ON                     Φ1     FREQ

Year   Month    Date   Hour   Minute  Second
2010   11       13     14     37      25
```

screen 2 (4-5-2)

```
Folder Name:     WTA01                                          SETUP
File Name:    3P401001.XLS
REC Date:    2008-11-28  00:03:17
Sampling Time:          2      Trans Ref  :      220.0 V
Delet File:            0  %    SDVP :            10%
SD Format:             0  %    Decimal:         Basic
Use Size:            388   KB  Clamp Type:     CP1201
Free Size:           1946 MB   A      Range:        200A
Total Size:          1946 MB   V      Range:      200mV
                               RS232 Out Sel:
PT:                  1 : 1     V1     I1       P1
CT:                  1 : 1     S1     Q1       PF1
Beep:   ON                     Φ1     FREQ

Year   Month    Date    Hour    Minute   Second
2010   12       05      11      15       31
```

C : File Name description : press ▲ or ▼ in screen 2 to select expect file number from 001 to 050.

Remark : When press ▲ or ▼ > 2 sec, the setting no. will change fast.

* 1P201001 : 1P2 means one phase by two wires.
* 1P301001: 1P3 means one phase by three wires,
* 3P301001 : 3P3 means three phases by three wires.
* 3P401001 : 3P4 means three phases by four wires.
* HAR01001 : HAR means harmonic measurement.
* PHA01001 : PHA means phasor measurement.
* TRA01001 : TRA means transient measurement.

Remark :

Above file description, 01 means folder number, 001 means file number.

D : The up right display will show " SHIFT1 " symbol while pressing SHIFT KEY once in screen 2, and then press ▼ to enter next setting function as screen 3 (File Name → Sampling Time).

E : The up right display will show " SHIFT2 " symbol while pressing SHIFT KEY again in screen 4, at this time press ▲ or ▼ to select 1P/2W(1P2)、1P/3W(1P3)、3P/3W(3P3) and 3P/4W(3P4) as screen 4.

F: One by one to press SHIFT KEY to select different functions circularly.

```
Folder Name:      WTA01                                  SETUP
File Name:    3P401001.XLS                               SHIFT 1
REC Date:     2008-11-28  00:03:17
Sampling Time:          2      Trans Ref  :      220.0 V
Delet File:             0  %   SDVP :            10%
SD Format:              0  %   Decimal:         Basic
Use Size:             388   KB  Clamp Type:     CP1201
Free Size:            1946 MB   A      Range:       200A
Total Size:           1946 MB   V      Range:     200mV
                                RS232 Out Sel:
PT:                   1 : 1     V1     I1       P1
CT:                   1 : 1     S1     Q1       PF1
Beep:   ON                      Φ1     FREQ

Year    Month     Date    Hour    Minute   Second
2010    11        13      14      37       25
```

screen 3 (4-5-2)

```
Folder Name:      WTA01                                  SETUP
File Name:    3P401001.XLS                               SHIFT 2
REC Date:     2008-11-28  00:03:17
Sampling Time:          2      Trans Ref  :      220.0 V
Delet File:             0  %   SDVP :            10%
SD Format:              0  %   Decimal:         Basic
Use Size:             388   KB  Clamp Type:     CP1201
Free Size:            1946 MB   A      Range:       200A
Total Size:           1946 MB   V      Range:     200mV
                                RS232 Out Sel:
PT:                   1 : 1     V1     I1       P1
CT:                   1 : 1     S1     Q1       PF1
Beep:   ON                      Φ1     FREQ

Year    Month     Date    Hour    Minute   Second
2010    11        13      14      37       25
```

screen 4 (4-5-2)

4-5-3 Sampling time: Set the data logger sampling time for SD

A : When press SHIFT KEY once, the symbol " SHIFT1 " will disappear on up right display, at this time press ▲ or ▼ to adjust expect sampling time as screen 2, adjusting numbers are from 2 to 7200 seconds.

Remark : When press ▲ or ▼ > 2 sec, the setting no. will change fast.

B : The up right display will show " SHIFT1 " symbol while pressing SHIFT KEY again, and then press ▼ to enter next setting function (Sampling Time → Delete File)

screen 1 (4-5-3)

```
Folder Name:      WTA01                                   SETUP
File Name:      3P401001.XLS                              SHIFT 1
REC Date:    2008-11-28  00:03:17
Sampling Time:      2        Trans Ref  :       220.0 V
Delet File:         0 %      SDVP :             10%
SD Format:          0 %      Decimal:           Basic
Use Size:         388  KB    Clamp Type:        CP1201
Free Size:       1946 MB     A      Range:        200A
Total Size:      1946 MB     V      Range:      200mV
                             RS232 Out Sel:
PT:              1 : 1       V1     I1      P1
CT:              1 : 1       S1     Q1      PF1
Beep:    ON                  Φ1     FREQ

Year    Month     Date    Hour    Minute    Second
2010    11        13      14      37        25
```

screen 2 (4-5-3)

```
Folder Name:      WTA01                                   SETUP
File Name:      3P401001.XLS
REC Date:    2008-11-28  00:03:17
Sampling Time:      2        Trans Ref  :       220.0 V
Delet File:         0 %      SDVP :             10%
SD Format:          0 %      Decimal:           Basic
Use Size:         388  KB    Clamp Type:        CP1201
Free Size:       1946 MB     A      Range:        200A
Total Size:      1946 MB     V      Range:      200mV
                             RS232 Out Sel:
PT:              1 : 1       V1     I1      P1
CT:              1 : 1       S1     Q1      PF1
Beep:    ON                  Φ1     FREQ

Year    Month     Date    Hour    Minute    Second
2010    11        13      14      37        25
```

4-5-4 Delete File: Delete the files for SD

A : The indicator " Y or N " will appear on right side display of the option while pressing SHIFT KEY continuously at least two seconds, and now press ▲ the display will show " Y " in highlight as screen 2, press SETUP KEY again to confirm, the selected file (ex: 3P401001.XLS) will be erased then return to screen 1, or else press SETUP KEY in " N " option to return to screen 1.

B : Press ▼ in screen 1 to enter next setting function (Delete File → SD Format)

screen 1 (4-5-4)

Folder Name:	WTA01				**SETUP**
File Name:	3P401001.XLS				**SHIFT 1**
REC Date:	2008-11-28 00:03:17				
Sampling Time:	2	Trans Ref :	220.0 V		
Delete File:	0 %	SDVP :	10%		
SD Format:	0 %	Decimal:	Basic		
Use Size:	388 KB	Clamp Type:	CP1201		
Free Size:	1946 MB	A	Range:	200A	
Total Size:	1946 MB	V	Range:	200mV	
		RS232 Out Sel:			
PT:	1 : 1	V1	I1	P1	
CT:	1 : 1	S1	Q1	PF1	
Beep: ON		Φ1	FREQ		
Year	Month	Date	Hour	Minute	Second
2010	11	13	14	37	25

screen 2 (4-5-4)

Folder Name:	WTA01				**SETUP SHIFT 1**
File Name:	3P401001.XLS				
REC Date:	2008-11-28 00:03:17				
Sampling Time:	2	Trans Ref :	220.0 V		
→ **Delete File:**	Y OR N	SDVP :	10%		
SD Format:	0 %	Decimal:	Basic		
Use Size:	388 KB	Clamp Type:	CP1201		
Free Size:	1946 MB	A	Range:	200A	
Total Size:	1946 MB	V	Range:	200mV	
		RS232 Out Sel:			
PT:	1 : 1	V1	I1	P1	
CT:	1 : 1	S1	Q1	PF1	
Beep: ON		Φ1	FREQ		
Year	Month	Date	Hour	Minute	Second
2010	11	13	14	37	25

4-5-5 SD Format : Formatting function for SD CARD

A : The indicator " Y or N " will appear on right side display of the option while pressing SHIFT KEY continuously at least two seconds, and press ▲ the display will show " Y " in highlight as screen 2, press SETUP KEY again to confirm to format SD CARD then return to screen 1, or else press SETUP KEY in " N " option return to screen 1.

B : Press ▼ in screen 1 to enter next setting function (SD Format → PT).

screen 1 (4-5-5)

Folder Name:	WTA01					**SETUP**
File Name:	3P401001.XLS					**SHIFT 1**
REC Date:	2008-11-28 00:03:17					
Sampling Time:	2		Trans Ref :		220.0 V	
Delete File:	0 %		SDVP :		10%	
SD Format:	0 %		Decimal:		Basic	
Use Size:	388 KB		Clamp Type:		CP1201	
Free Size:	1946 MB		A	Range:	200A	
Total Size:	1946 MB		V	Range:	200mV	
			RS232 Out Sel:			
PT:	1 : 1		V1	I1	P1	
CT:	1 : 1		S1	Q1	PF1	
Beep: ON			Φ1	FREQ		
Year	Month	Date	Hour	Minute	Second	
2010	11	13	14	37	25	

screen 2 (4-5-5)

Folder Name:	WTA01					**SETUP**
File Name:	3P401001.XLS					**SHIFT 1**
REC Date:	2008-11-28 00:03:17					
Sampling Time:	2		Trans Ref :		220.0 V	
Delete File:	0 %		SDVP :		10%	
SD Format:	Y OR N		Decimal:		Basic	
Use Size:	388 KB		Clamp Type:		CP1201	
Free Size:	1946 MB		A	Range:	200A	
Total Size:	1946 MB		V	Range:	200mV	
			RS232 Out Sel:			
PT:	1 : 1		V1	I1	P1	
CT:	1 : 1		S1	Q1	PF1	
Beep: ON			Φ1	FREQ		
Year	Month	Date	Hour	Minute	Second	
2010	11	13	14	37	25	

4-5-6 PT: Set the Potential Transformer

A : When press SHIFT KEY once, the symbol " SHIFT1 " will disappear as screen 2 at this time press ▲ or ▼ can adjust to expect PT values, the adjusting numbers are from 1 to 1000.

Remark : When press ▲ or ▼ > 2 sec, the setting no. will change fast.

B : Press SHIFT KEY once again will return to screen 1 then press ▼ to enter next setting function (PT → CT).

screen 1 (4-5-6)

Folder Name:	WTA01					**SETUP**
File Name:	3P401001.XLS					**SHIFT 1**
REC Date:	2008-11-28 00:03:17					
Sampling Time:	2		Trans Ref :		220.0 V	
Delete File:	0	%	SDVP :		10%	
SD Format:	0	%	Decimal:		Basic	
Use Size:	388	KB	Clamp Type:		CP1201	
Free Size:	1946	MB	A	Range:	200A	
Total Size:	1946	MB	V	Range:	200mV	
			RS232 Out Sel:			
PT:	1 : 1		V1	I1	P1	
CT:	1 : 1		S1	Q1	PF1	
Beep: ON			Φ1	FREQ		

Year	Month	Date	Hour	Minute	Second
2010	11	13	14	37	25

screen 2 (4-5-6)

Folder Name:	WTA01					**SETUP**
File Name:	3P401001.XLS					
REC Date:	2008-11-28 00:03:17					
Sampling Time:	2	Trans Ref :	220.0 V			
Delete File:	0 %	SDVP :	10%			
SD Format:	0 %	Decimal:	Basic			
Use Size:	388 KB	Clamp Type:	CP1201			
Free Size:	1946 MB	A	Range:	200A		
Total Size:	1946 MB	V	Range:	200mV		
		RS232 Out Sel:				
PT:	1 : 1	V1	I1	P1		
CT:	1 : 1	S1	Q1	PF1		
Beep: ON		Φ1	FREQ			
Year	Month	Date	Hour	Minute	Second	
2010	11	13	14	37	25	

4-5-7 CT: Set the Current Transformer

A : When press SHIFT KEY once, the symbol " SHIFT1 " will disappear as screen 2 at this time press ▲ or ▼ can adjust to expect CT values, the adjusting numbers are from 1 to 600.

Remark : When press ▲ or ▼ > 2 sec, the setting no. will change fast.

B : Press SHIFT KEY once again will return to screen 1 then press ▼ to enter next setting function (CT → BEEP). again will return to screen 1 then press ▼ to enter next setting function (CT → BEEP).

screen 1 (4-5-7)

Folder Name:	WTA01					**SETUP**
File Name:	3P401001.XLS					**SHIFT 1**
REC Date:	2008-11-28 00:03:17					
Sampling Time:	2		Trans Ref :		220.0 V	
Delete File:	0	%	SDVP :		10%	
SD Format:	0	%	Decimal:		Basic	
Use Size:	388	KB	Clamp Type:		CP1201	
Free Size:	1946	MB	A	Range:	200A	
Total Size:	1946	MB	V	Range:	200mV	
			RS232 Out Sel:			
PT:	1 : 1		V1	I1	P1	
CT:	1 : 1		S1	Q1	PF1	
Beep: ON			Φ1	FREQ		

Year	Month	Date	Hour	Minute	Second
2010	11	13	14	37	25

screen 2 (4-5-7)

Folder Name:	WTA01					**SETUP**
File Name:	3P401001.XLS					
REC Date:	2008-11-28 00:03:17					
Sampling Time:	2		Trans Ref :		220.0 V	
Delete File:	0	%	SDVP :		10%	
SD Format:	0	%	Decimal:		Basic	
Use Size:	388	KB	Clamp Type:		CP1201	
Free Size:	1946	MB	A	Range:	200A	
Total Size:	1946	MB	V	Range:	200mV	
			RS232 Out Sel:			
PT:	1 : 1		V1	I1	P1	
CT:	1 : 1		S1	Q1	PF1	
Beep: ON			Φ1	FREQ		

Year	Month	Date	Hour	Minute	Second
2010	11	13	14	37	25

4-5-8 Beep: Control the buzzer to ON/OFF

A : When press SHIFT KEY once the symbol " SHIFT1 " will disappear as screen 2, at this time press ▲ or ▼ to control the buzzer to ON/OFF.

B : Press SHIFT KEY once again will return to screen 1 then press ▼ to enter next setting function (BEEP → Trans Ref type)

screen 1 (4-5-8)

Folder Name:	WTA01					**SETUP**
File Name:	3P401001.XLS					**SHIFT 1**
REC Date:	2008-11-28 00:03:17					
Sampling Time:	2		Trans Ref :		220.0 V	
Delete File:	0	%	SDVP :		10%	
SD Format:	0	%	Decimal:		Basic	
Use Size:	388	KB	Clamp Type:		CP1201	
Free Size:	1946	MB	A	Range:	200A	
Total Size:	1946	MB	V	Range:	200mV	
			RS232 Out Sel:			
PT:	1 : 1		V1	I1	P1	
CT:	1 : 1		S1	Q1	PF1	
Beep: ON			Φ1	FREQ		

Year	Month	Date	Hour	Minute	Second
2010	11	13	14	37	25

screen 2 (4-5-8)

Folder Name:	WTA01					**SETUP**
File Name:	3P401001.XLS					
REC Date:	2008-11-28 00:03:17					
Sampling Time:	2	Trans Ref :	220.0 V			
Delete File:	0 %	SDVP :	10%			
SD Format:	0 %	Decimal:	Basic			
Use Size:	388 KB	Clamp Type:	CP1201			
Free Size:	1946 MB	A	Range:	200A		
Total Size:	1946 MB	V	Range:	200mV		
		RS232 Out Sel:				
PT:	1 : 1	V1	I1	P1		
CT:	1 : 1	S1	Q1	PF1		
Beep: ON		Φ1	FREQ			
Year	Month	Date	Hour	Minute	Second	
2010	11	13	14	37	25	

4-5-9 Trans Ref: Nominal voltage for transient detection reference

A : When press SHIFT KEY once will disappear as screen 2, at this time press ▲ or ▼ to adjsut the voltage level to 50.0 V to 850.0 V.

B : Press SHIFT KEY once again will return to screen 1 then press ▼ to enter next setting function (Trans Ref → SDVP).

screen 1 (4-5-9)

Folder Name:	WTA01					**SETUP**
File Name:	3P401001.XLS					**SHIFT 1**
REC Date:	NO File					
Sampling Time:	2	**Trans Ref :**	220.0 V			
Delete File:	0 %	SDVP :	10%			
SD Format:	0 %	Decimal:	Basic			
Use Size:	23 MB	Clamp Type:	CP1201			
Free Size:	1904 MB	A	Range:	200A		
Total Size:	1927 MB	V	Range:	200mV		
		RS232 Out Sel:				
PT:	1 : 1	V1	I1	P1		
CT:	1 : 1	S1	Q1	PF1		
Beep: ON		Φ1	FREQ			
Year	Month	Date	Hour	Minute	Second	
2010	12	14	09	22	41	

screen 2 (4-5-9)

Folder Name:	WTA01					**SETUP**
File Name:	3P401001.XLS					
REC Date:	NO File					
Sampling Time:	2	**Trans Ref :**	220.0 V			
Delete File:	0 %	SDVP :	10%			
SD Format:	0 %	Decimal:	Basic			
Use Size:	23 MB	Clamp Type:	CP1201			
Free Size:	1904 MB	A	Range:	200A		
Total Size:	1927 MB	V	Range:	200mV		
		RS232 Out Sel:				
PT:	1 : 1	V1	I1	P1		
CT:	1 : 1	S1	Q1	PF1		
Beep: ON		Φ1	FREQ			
Year	Month	Date	Hour	Minute	Second	
2010	12	14	09	22	41	

4-5-10 SDVP: Set up upper and low limits % of transient voltage detection

A : When press SHIFT KEY once will disappear as screen 2, at this time press ▲ or ▼ to adjsut the voltage % value to 1% to 100%.

B : Press SHIFT KEY once again will return to screen 1 then press ▼ to enter next setting function (SDVP → Decimal).

screen 1 (4-5-10)

Folder Name:	WTA01					**SETUP**
File Name:	3P401026.XLS					**SHIFT 1**
REC Date:	NO File					
Sampling Time:	2		Trans Ref :		220.0 V	
Delete File:	0 %		**SDVP :**		10%	
SD Format:	0 %		Decimal:		Basic	
Use Size:	23 MB		Clamp Type:		CP1201	
Free Size:	1904 MB		A	Range:	200A	
Total Size:	1927 MB		V	Range:	200mV	
			RS232 Out Sel:			
PT:	1 : 1		V1	I1	P1	
CT:	1 : 1		S1	Q1	PF1	
Beep: ON			Φ1	FREQ		
Year	Month	Date	Hour	Minute	Second	
2010	12	14	09	22	41	

screen 2 (4-5-10)

Folder Name:	WTA01					**SETUP**
File Name:	3P401026.XLS					
REC Date:	NO File					
Sampling Time:	2	Trans Ref :	220.0 V			
Delete File:	0 %	**SDVP :**	10%			
SD Format:	0 %	Decimal:	Basic			
Use Size:	23 MB	Clamp Type:	CP1201			
Free Size:	1904 MB	A	Range:	200A		
Total Size:	1927 MB	V	Range:	200mV		
		RS232 Out Sel:				
PT:	1 : 1	V1	I1	P1		
CT:	1 : 1	S1	Q1	PF1		
Beep: ON		Φ1	FREQ			
Year	Month	Date	Hour	Minute	Second	
2010	12	14	09	22	41	

4-5-11 Decimal Type: set the Decimal type to Basic (.) or Euro (,)

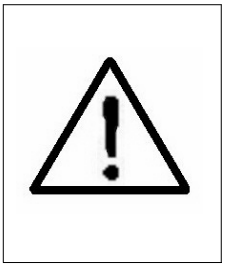

The numerical data structure of SD card is default used the " . " as the decimal, for example "20.6" "1000.53" . But in certain countries (Europe ...) is used the " , " as the decimal point, for example " 20,6 " "1000,53". Under such situation, it should change the Decimal character at first.

A : When press SHIFT KEY once the symbol " SHIFT1 " will disappear as screen 2, at this time press ▲ or ▼ to select the Decimal type to " Basic " or " Euro ".

** Basic type :*
The numerical data structure of SD card is default used the " . " as the decimal, for example "20.6" "1000.53" .
** Euro type :*
The numerical data structure of SD card is default used the " , " as the decimal, for example "20,6" "1000,53" .

B : Press SHIFT KEY once again will return to screen 1 then press ▼ to enter next setting function (Decimal type → Clamp type).

screen 1 (4-5-11)

Folder Name:	WTA01					**SETUP**
File Name:	3P401001.XLS					**SHIFT 1**
REC Date:	2008-11-28 00:03:17					
Sampling Time:	2		Trans Ref :		220.0 V	
Delete File:	0 %		SDVP :		10%	
SD Format:	0 %		**Decimal:**		Basic	
Use Size:	388 KB		Clamp Type:		CP1201	
Free Size:	1946 MB		A	Range:	200A	
Total Size:	1946 MB		V	Range:	200mV	
			RS232 Out Sel:			
PT:	1 : 1		V1	I1	P1	
CT:	1 : 1		S1	Q1	PF1	
Beep: ON			Φ1	FREQ		
Year	Month	Date	Hour	Minute	Second	
2010	11	13	14	37	25	

screen 2 (4-5-11)

Folder Name:	WTA01					**SETUP**
File Name:	3P401001.XLS					
REC Date:	2008-11-28 00:03:17					
Sampling Time:	2	Trans Ref :	220.0 V			
Delete File:	0 %	SDVP :	10%			
SD Format:	0 %	**Decimal:**	Basic			
Use Size:	388 KB	Clamp Type:	CP1201			
Free Size:	1946 MB	A	Range:	200A		
Total Size:	1946 MB	V	Range:	200mV		
		RS232 Out Sel:				
PT:	1 : 1	V1	I1	P1		
CT:	1 : 1	S1	Q1	PF1		
Beep: ON		Φ1	FREQ			
Year	Month	Date	Hour	Minute	Second	
2010	11	13	14	37	25	

4-5-12 Clamp Type: set the clamp type to Lutron Clamp or other Clamp

A : When press SHIFT KEY once the symbol " SHIFT1 " will be disappeared and show as screen 2, at this time press ▲ or ▼ to select the Lutron standard clamp or other Clamp (CP-200, CP-1201, CP-2000. CP-3000, Other).

B : When select the different Clamp type, the V range and the A range will show the corresponding value.

C : Press SHIFT KEY once again will return to screen 1 then press ▼ to enter next setting function (Clamp Type → A range).

screen 1 (4-5-12)

Folder Name:	WTA01					**SETUP**
File Name:	3P401001.XLS					**SHIFT 1**
REC Date:	2008-11-28 00:03:17					
Sampling Time:	2		Trans Ref :		220.0 V	
Delete File:	0	%	SDVP :		10%	
SD Format:	0	%	Decimal:		Basic	
Use Size:	388	KB	**Clamp Type:**		CP1201	
Free Size:	1946	MB	A	Range:	200A	
Total Size:	1946	MB	V	Range:	200mV	
			RS232 Out Sel:			
PT:	1 : 1		V1	I1	P1	
CT:	1 : 1		S1	Q1	PF1	
Beep: ON			Φ1	FREQ		
Year	Month	Date	Hour	Minute	Second	
2010	11	13	14	37	25	

screen 2 (4-5-12)

Folder Name:	WTA01					**SETUP**
File Name:	3P401001.XLS					
REC Date:	2008-11-28 00:03:17					
Sampling Time:	2		Trans Ref :		220.0 V	
Delete File:	0	%	SDVP :		10%	
SD Format:	0	%	Decimal:		Basic	
Use Size:	388	KB	**Clamp Type:**		CP1201	
Free Size:	1946	MB	A	Range:	200A	
Total Size:	1946	MB	V	Range:	200mV	
			RS232 Out Sel:			
PT:	1 : 1		V1	I1	P1	
CT:	1 : 1		S1	Q1	PF1	
Beep: ON			Φ1	FREQ		
Year	Month	Date	Hour	Minute	Second	
2010	11	13	14	37	25	

4-5-13 A range Setting (Current range Setting)

A : When press SHIFT KEY once the symbol " SHIFT1 " will be disappeared and show as screen 2, at this time press ▲ or ▼ to select A range to 20A to 2000A or 30A to 3000A.

** The setting value should accoding your Clamp type.*
** The CP-3000 clamp can set 30A, 300A, 3000A.*
** The CP-2000 clamp can set 20A, 200A, 2000A.*
** The CP-1201 clamp can set 20A, 200A, 1200A.*
** The CP-200 clamp can set 20A, 200A.*
** The Other clamp can set 20A, 200A, 2000A, 30A 300A, 3000A.*

Attention :
The meter's A range (Current range) value should same as the Clamp's current selecting range value.

B : Press SHIFT KEY once again will return to screen 1 then press ▼ to enter next setting function (A Range → V range).

screen 1 (4-5-13)

Folder Name:	WTA01					**SETUP**
File Name:	3P401001.XLS					**SHIFT 1**
REC Date:	2008-11-28 00:03:17					
Sampling Time:	2		Trans Ref :		220.0 V	
Delete File:	0 %		SDVP :		10%	
SD Format:	0 %		Decimal:		Basic	
Use Size:	388 KB		Clamp Type:		CP1201	
Free Size:	1946 MB		**A Range:**		200A	
Total Size:	1946 MB		V	Range:	200mV	
			RS232 Out Sel:			
PT:	1 : 1		V1	I1	P1	
CT:	1 : 1		S1	Q1	PF1	
Beep: ON			Φ1	FREQ		
Year	Month	Date	Hour	Minute	Second	
2010	11	13	14	37	25	

screen 2 (4-5-13)

Folder Name:	WTA01		**SETUP**
File Name:	3P401001.XLS		
REC Date:	2008-11-28 00:03:17		
Sampling Time:	2	Trans Ref :	220.0 V
Delete File:	0 %	SDVP :	10%
SD Format:	0 %	Decimal:	Basic
Use Size:	388 KB	Clamp Type:	CP1201
Free Size:	1946 MB	**A Range:**	200A
Total Size:	1946 MB	V Range:	200mV
		RS232 Out Sel:	
PT:	1 : 1	V1 I1	P1
CT:	1 : 1	S1 Q1	PF1
Beep: ON		Φ1 FREQ	

Year	Month	Date	Hour	Minute	Second
2010	11	13	14	37	25

4-5-14 V range Setting (Voltage range Setting)

A : When press SHIFT KEY once the symbol " SHIFT1 " will be disappeared and show as screen 2, at this time press ▲ or ▼ to select V range to 200mV, 300mV, 500mV, 1V, 2V, 3V.

** The setting function only available for the Other clamp.*

** The V range value of CP-200, CP-1201, CP-2000, CP-3000 will dfault to 200mV, it can not be adjusted.*

B : Press SHIFT KEY once again will return to screen 1 then press ▼ to enter next setting function (A Range → RS232 OUT SEL).

screen 1 (4-5-14)

Folder Name:	WTA01					**SETUP**
File Name:	3P401001.XLS					**SHIFT 1**
REC Date:	2008-11-28 00:03:17					
Sampling Time:	2		Trans Ref :		220.0 V	
Delete File:	0	%	SDVP :		10%	
SD Format:	0	%	Decimal:		Basic	
Use Size:	388	KB	Clamp Type:		CP1201	
Free Size:	1946	MB	A	Range:	200A	
Total Size:	1946	MB	**V**	**Range:**	200mV	
			RS232 Out Sel:			
PT:	1 : 1		V1	I1	P1	
CT:	1 : 1		S1	Q1	PF1	
Beep: ON			Φ1	FREQ		
Year	Month	Date	Hour	Minute	Second	
2010	11	13	14	37	25	

screen 2 (4-5-14)

Folder Name:	WTA01					**SETUP**
File Name:	3P401001.XLS					
REC Date:	2008-11-28 00:03:17					
Sampling Time:	2		Trans Ref :		220.0 V	
Delete File:	0	%	SDVP :		10%	
SD Format:	0	%	Decimal:		Basic	
Use Size:	388	KB	Clamp Type:		CP1201	
Free Size:	1946	MB	A	Range:	200A	
Total Size:	1946	MB	**V**	**Range:**	200mV	
			RS232 Out Sel:			
PT:	1 : 1		V1	I1	P1	
CT:	1 : 1		S1	Q1	PF1	
Beep: ON			Φ1	FREQ		
Year	Month	Date	Hour	Minute	Second	
2010	11	13	14	37	25	

4-5-15 RS232 Out Sel setting

A : When press SHIFT KEY continuously at least two seconds as screen 2 and now press ▲ or ▼ to select the item that intend to output, maximum up to nine items, when the cursor stops on the selected item and then press SETUP KEY again, the selected item will be displayed in highlight.

B : Press SHIFT KEY it can change the screen page from Screen 2 → Screen 5.

C : If the selected items are over nine, the low right display will show indicator " full " as screen 6.

D : After the selecting is completed, press SHIFT KEY continuously at least two seconds again will return to screen 1 and show all the selected items at the same time.

E : Press ▼ in screen 1 to enter next setting function (RS232 Out Sel → Year)

screen 1 (4-5-15)

Folder Name:	WTA01					**SETUP**
File Name:	3P401001.XLS					**SHIFT 1**
REC Date:	2008-11-28 00:03:17					
Sampling Time:	2		Trans Ref :		220.0 V	
Delete File:	0	%	SDVP :		10%	
SD Format:	0	%	Decimal:		Basic	
Use Size:	388	KB	Clamp Type:		CP1201	
Free Size:	1946	MB	A	Range:	200A	
Total Size:	1946	MB	V	Range:	200mV	
			RS232 Out Sel:			
PT:	1 : 1		V1	I1	P1	
CT:	1 : 1		S1	Q1	PF1	
Beep: ON			Φ1	FREQ		
Year	Month	Date	Hour	Minute	Second	
2010	11	13	14	37	25	

screen 2 (4-5-15)

RS232 OUTPUT SELECT

1.	V12	12.	P3	23.	PF2
2.	V23	13.	PΣ	24.	PF3
3.	V31	14.	**S1**	25.	PFΣ
4.	V1	15.	S2	26.	PFH
5.	V2	16.	S3	27.	**Φ1**
6.	V3	17.	SΣ	28.	Φ 2
7.	**I1**	18.	**Q1**	29.	Φ 3
8.	I2	19.	Q2	30.	**WH**
9.	I3	20.	Q3	31.	SH
10.	**P1**	21.	QΣ	32.	QH
11.	P2	22.	**PF1**	33.	**FREQ**

screen 3 (4-5-15)

RS232 OUTPUT SELECT

34.	H01	45.	H12	56	H23
35.	H02	46.	H13	57	H24
36.	H03	47.	H14	58	H25
37.	H04	48.	H15	59	H26
38.	H05	49.	H16	60	H27
39.	H06	50.	H17	61	H28
40.	H07	51	H18	62	H29
41.	H08	52	H19	63	H30
42.	H09	53.	H20	64	H31
43.	H11	54.	H21	65	H32
44.	H01	55.	H22	66	H33

screen 4 (4-5-15)

RS232 OUTPUT SELECT

67.	H34	78.	H45	89	Φ V12
68.	H35	79.	H46	90	Φ V23
69.	H36	80	H47	91	Φ V31
70.	H37	81.	H48	92	Φ V1
71.	H38	82.	H49	93	Φ V2
72.	H39	83.	H50	94	Φ V3
73.	H40	84.	THD	95	Φ A1
74.	H41	85.	Vpp	96	Φ A2
75.	H42	86.	CFV	97	Φ A3
76.	H43	87.	App	98	AveV
77.	H44	88	CFA	99	AveA

screen 5 (4-5-15)

RS232 OUTPUT SELECT

100.	Vn
101.	An
102.	dV
103.	VUR
104.	Vd0
105.	Vd2
106.	dA
107.	AUR
108.	Ad0
109.	Ad2

screen 6 (4-5-15)

RS232 OUTPUT SELECT

1.	V12	12.	P3	23.	PF2
2.	V23	13.	PΣ	24.	PF3
3.	V31	14.	**S1**	25.	PFΣ
4.	**V1**	15.	S2	26.	PFH
5.	V2	16.	S3	27.	**Φ1**
6.	V3	17.	SΣ	28.	Φ 2
7.	I1	18.	**Q1**	29.	Φ 3
8.	I2	19.	Q2	30.	**WH**
9.	I3	20.	Q3	31.	SH
10.	**P1**	21.	QΣ	32.	QH
11.	P2	22.	**PF1**	33.	**FREQ**
					FULL

4-5-16 Year/Month/Date/Hour/Minute/Second setting

A : When press SHIFT KEY once the symbol " SHIFT1" will disappear as screen 2, at this time press ▲ or ▼ to adjust expect numbers, and press ▲ or ▼ continuously at least two seconds can skip the numbers faster.

B : When press SHIFT KEY once, the symbol " SHIFT1" will appear as screen 1, at this time press ▼ to enter next setting function (Year → Month).

C : The settings about (Month → Date), (Date → Hour), (Hour → Minute), (Minute → Second) are same as above step A and step B.

D : In this setting function (Year → Minute), press ▲ or ▼ in addition to adjust the numbers, and the setting value will also be saved during the adjusting.

E : In the function of setting " second ", press ▲ or ▼ to adjust numbers. at this point the number of second is at a standstill condition and then press setup key that will save setting value and also start counting function of " second ".

Folder Name:	WTA01				**SETUP**	
File Name:	3P401001.XLS				**SHIFT 1**	
REC Date:	2008-11-28 00:03:17					
Sampling Time:	2	Trans Ref :	220.0 V			screen 1
Delete File:	0 %	SDVP :	10%			(4-5-16)
SD Format:	0 %	Decimal:	Basic			
Use Size:	388 KB	Clamp Type:	CP1201			
Free Size:	1946 MB	A	Range:	200A		
Total Size:	1946 MB	V	Range:	200mV		
		RS232 Out Sel:				
PT:	1 : 1	V1	I1	P1		
CT:	1 : 1	S1	Q1	PF1		
Beep: ON		Φ1	FREQ			
Year	Month	Date	Hour	Minute	Second	
2010	11	13	14	37	25	

Folder Name:	WTA01					**SETUP**
File Name:	3P401001.XLS					
REC Date:	2008-11-28 00:03:17					
Sampling Time:	2		Trans Ref :		220.0 V	screen 2
Delete File:	0	%	SDVP :		10%	(4-5-16)
SD Format:	0	%	Decimal:		Basic	
Use Size:	388	KB	Clamp Type:		CP1201	
Free Size:	1946	MB	A	Range:	200A	
Total Size:	1946	MB	V	Range:	200mV	
			RS232 Out Sel:			
PT:	1 : 1		V1	I1	P1	
CT:	1 : 1		S1	Q1	PF1	
Beep: ON			Φ1	FREQ		
Year	Month	Date	Hour	Minute	Second	
2010	11	13	14	37	25	

4-5-17 When all settings are completed, press EXIT KEY to return measuring screen.

4-5-18 The descriptions about SD CARD memory space

A : Use Size - To show the space data numbers that have been used.
B : Free Size - To show the data numbers of balance space.
C : Total Size - To show the data numbers of total space.
D : Typical SD CARD and SDHC both can be used with the instrument, except the SD CARD memory size is less than 32MB.

4-5-19 RESET KEY : Press this key to reboot the instrument

5. MEASURING PROCEDURES

5-1 1Φ 2W (one phase by two wires) measurement

A : Diagram

SCREEN 1 (5-1)

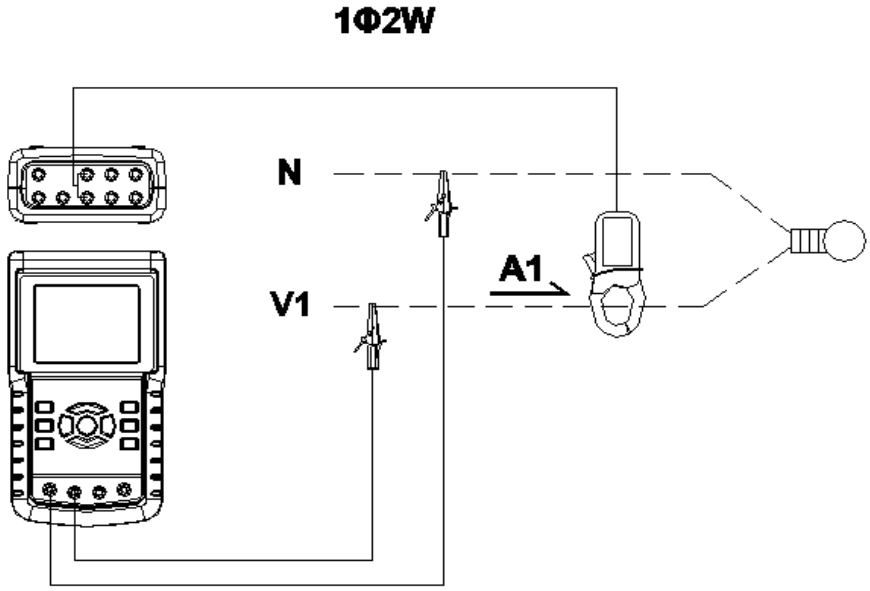

B : Operation Instructions:

B-1 : Power on the instrument by pressing POWER KEY, and then press 1Φ 3Φ KEY to select the 1Φ 2W system, the selected name of system will be appeared on bottom left display of screen 2.

B-2 : Connect the line voltage L1, Vn (Neutral) to V1 and N terminals of the instrument.

B-3: Place the conductor of CP-1201 (A1)to A1 as screen 1.

B-4: Connect the output of clamp meter " CP-1200(A1) " to A1 terminal of the instrument.

B-5: The related measuring factors will be appeared on display, about the instruction of factor please refer appendix 1 (5-16, page 68).

screen 2 (5-1)

```
V 1 :     0.0      V
A 1 :     0.00     A

P 1 : -   0.000KW      P F 1   : -  0.00
S 1 :     0.000KVA     P F H   :    0.00
Q 1 : -   0.000KVAR    Φ 1 :      - 0.0°

W H :     0.000KWH
S H :     0.000KVAH
Q H :     0.000KVARH        F R E Q :  50.1    Hz

CP1201
     20A   1Φ 2W   SEC:   2   CT:   1   PT:   1
```

5-2 1Φ3W (one phase by three wires) measurement

A : Diagram

screen1 (5-2)

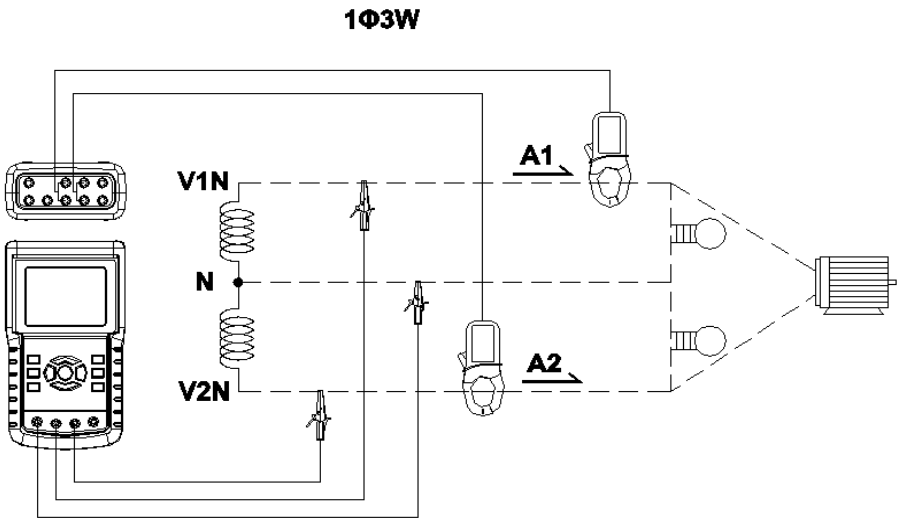

B : Operation Instructions:

B-1 : Power on the instrument by pressing POWER KEY, and then press 1Φ 3Φ KEY to select the 1Φ 3W system, the selected name of system will be appeared on bottom left display of screen 2.

B-2 : Connect the line voltage L1, L2 and Vn (Neutral) to V1, V2 and N terminals of the instrument.

B-3 : Place the conductor of CP-1201(A1), CP-1201(A2) hook to A1 and A2 as screen 1.

B-4 : Connect the outputs of clamp meter CP-1201(A1)、CP-1201(A2) to A1 and A2 terminals of the instrument.

B-5 : The related measuring factors will be appeared on display, about the instruction of factor please refer appendix 1 (5-16, page 68).

screen 2 (5-2)

V 1 :		0.0	V		P 1 :	-	0.000KW				
V 2 :		0.0	V		P 2 :	-	0.000KW				
A 1 :		0.00	A		S 1 :		0.000KVA				
A 2 :		0.00	A		S 2 :		0.000KVA				
Q 1 :	-	0.000KVAR									
Q 2 :	-	0.000KVAR									
PΣ :		0.000 KW		**SΣ :**		0.000 KVA		**QΣ :**		0.000 KVAR	
PF1:	-	0.00		**PF2:**	-	0.00		**PFΣ :**		0.00	
PFH:		0.00		**Φ1:**	-	0.0°		**Φ2:**	-	0.0°	
WH:		0.000 KWH		**SH:**		0.000 KVAH					
QH:		0.000 KVARH		**FREQ:**		50.0 Hz					
CP1201											
20A	**1Φ3W**		**SEC: 2**		**CT: 1**		**PT: 1**				

5-3 3Φ3W (three phases by three wires) measurement

A : Diagram

screen 1 (5-3)

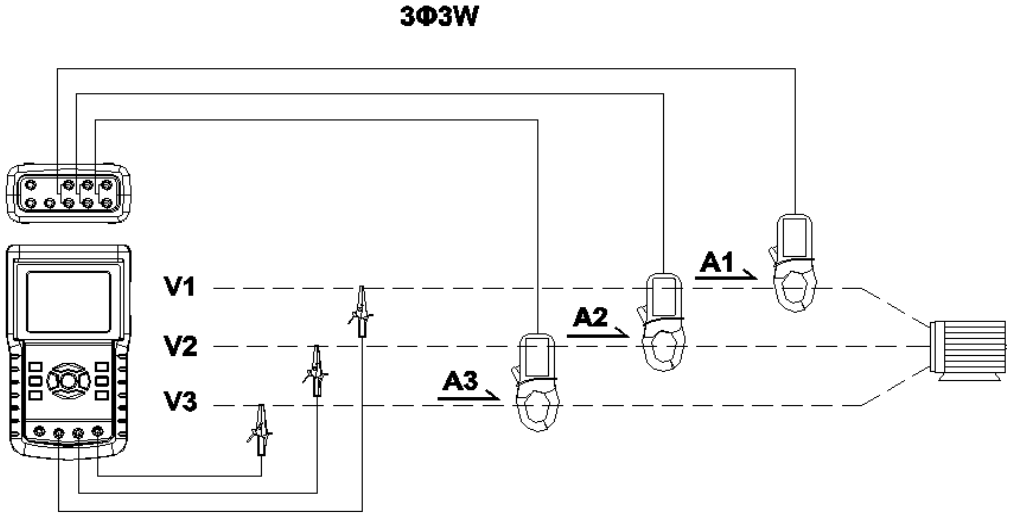

B : Operation Instructions:

B-1 : Power on the instrument by pressing POWER KEY, and then press 1Φ 3Φ KEY to select the 3Φ 3W system, the selected name of system will be appeared on bottom left display of screen 2.

B-2: Connect the line voltage L1, L2 and L3 to V1, V2 and V3 terminals of the instrument.

B-3: Place the conductor of CP-1201(A1), CP-1201(A2), CP-1201(A3) hook to A1, A2 ,A3 as screen 1.

B-4 : Connect the outputs of clamp meter CP-1201(A1) , CP-1201(A2), CP-1201(A3) to A1, A2, A3 terminals of the instrument.

B-5: The related measuring factors will be appeared on display, about the instruction of factor please refer appendix 1 (5-16, page 68).

screen 2 (5-3)

V 1 2 :	0.0	V	A 1 :	0.00	A
V 2 3 :	0.0	V	A 2 :	0.00	A
V 3 1 :	0.0	V	A 3 :	0.00	A
P Σ :	- 0.000 KW				
S Σ :	0.000 KVA				
Q Σ :	0.000 KVAR				
PFΣ :	0.00		P F H :	0.00	
WH:	0.000 KWH		**SH:**	0.000 KVAH	
QH:	0.000 KVARH		**FREQ:**	50.0 Hz	

CP1201
20A **3Φ3W** **SEC: 2** **CT: 1** **PT: 1**

5-4 3Φ4W (three phases by four wires) measurement

A : Diagram

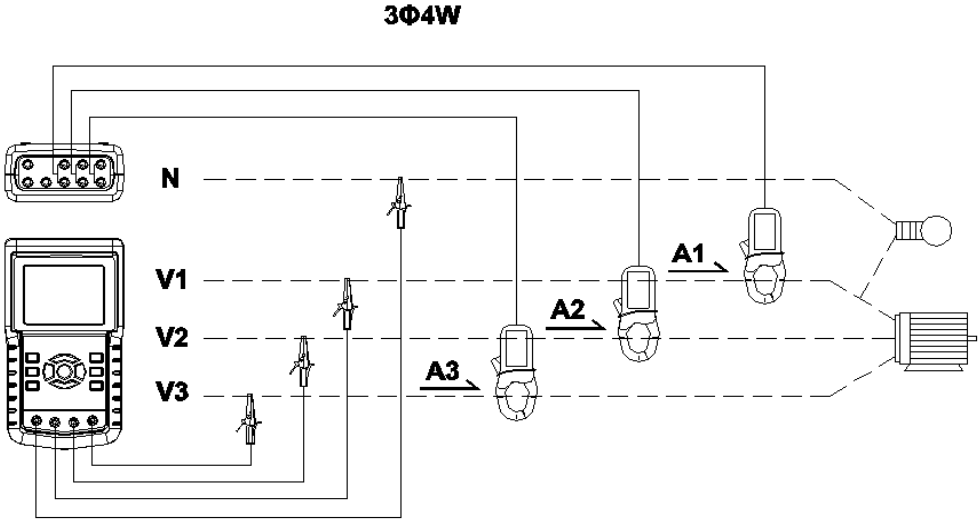

screen 1 (5-4)

B: Operation Instructions:

B-1 : Power on the instrument by pressing POWER KEY, and then press 1Φ 3Φ KEY to select the 3Φ 4W system, the selected name of system will be appeared on bottom left display of screen 2.

B-2 : Connect the line voltage L1, L2, L3 and Vn to V1, V2, V3 and N terminals of the instrument.

B-3 : Place the conductor of CP-1201(A1), CP-1201(A2)、CP-1201(A3) hook to A1, A2, A3 as screen 1.

B-4 : Connect the outputs of clamp meter CP-1201(A1), CP-1201(A2), CP-1201(A3) to A1、A2、A3 terminals of the instrument.

B-5 : The related measuring factors will be appeared on display, about the instruction of factor please refer appendix 1 (5-16, page 68).

screen 2 (5-4)

V12:	0.0 V		V1:	0.0 V		A1:	0.00 A	
V23:	0.0 V		V2:	0.0 V		A2:	0.00 A	
V31:	0.0 V		V3:	0.0 V		A3:	0.00 A	
P1:	- 0.000 KW		S1:	0.000 KVA		Q1:	- 0.000 KVAR	
P2:	- 0.000 KW		S2:	0.000 KVA		Q2:	- 0.000 KVAR	
P3:	- 0.000 KW		S3:	0.000 KVA		Q3:	- 0.000 KVAR	
PΣ	- 0.000 KW		SΣ :	0.000 KVA		QΣ :	- 0.000 KVAR	
PF1:	- 0.00		PF2:	- 0.00		PF3:	- 0.00	
PFΣ :	0.00		PFH:	0.00				
Φ1:	- 0.0°		Φ2:	- 0.0°		Φ3:	- 0.0°	
WH:	0.000 KWH					SH:	0.000 KVAH	
QH:	0.000 KVARH					FREQ:	0.0 Hz	
CP1201 20A	3Φ4W		SEC: 2		CT: 1		PT: 1	

5-5 The CT and PT measurement

A : Diagram

screen 1 (5-5)

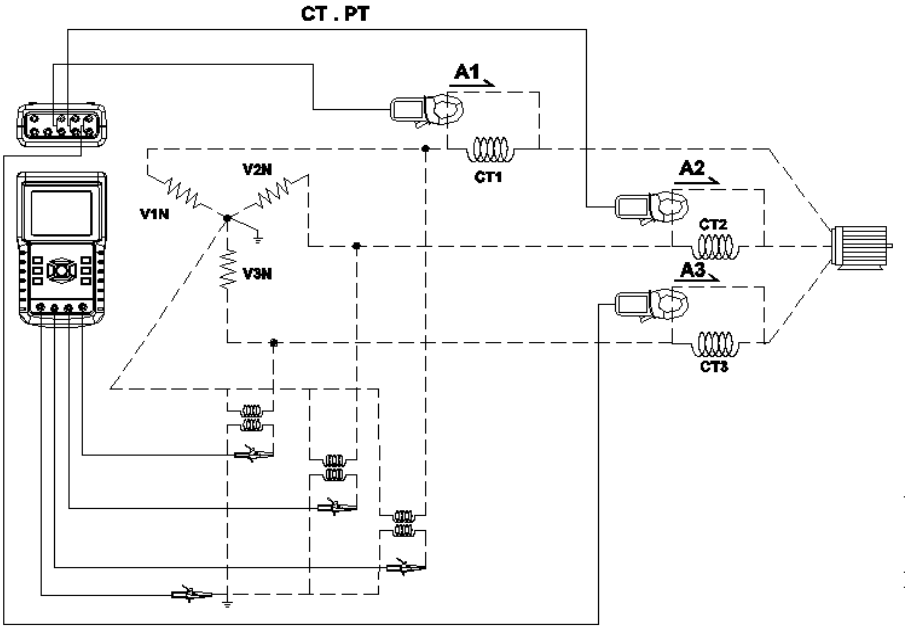

B : Operation Instructions

B-1 : Power on the instrument by pressing POWER KEY, and then press 1Φ 3Φ KEY to select the 3Φ 4W system, the selected name of system will be appeared on bottom left display of screen 2.

B-2 : Connect the line voltage L1, L2, L3 and Vn to V1, V2, V3 and N terminals of the instrument.

B-3 : Place the conductor of CP-1201(A1), CP-1201(A2), CP-1201(A3) hook to A1, A2 , A3 as screen 1.

B-4: Connect the outputs of clamp meter CP-1201(A1), CP-1201(A2), CP-1201(A3) to A1, A2, A3 terminals of the instrument.

B-5: The related measuring factors will be appeared on display, about the instruction of factor please refer appendix 1 (5-16, page 68).

screen 2 (5-5)

V12:	0.0	V	**V1:**	0.0	V	**A1:**	0.00	A
V23:	0.0	V	**V2:**	0.0	V	**A2:**	0.00	A
V31:	0.0	V	**V3:**	0.0	V	**A3:**	0.00	A
P1:	- 0.000	KW	**S1:**	0.000	KVA	**Q1:**	- 0.000	KVAR
P2:	- 0.000	KW	**S2:**	0.000	KVA	**Q2:**	- 0.000	KVAR
P3:	- 0.000	KW	**S3:**	0.000	KVA	**Q3:**	- 0.000	KVAR
PΣ	- 0.000	KW	**SΣ :**	0.000	KVA	**QΣ :**	- 0.000	KVAR
PF1:	- 0.00		**PF2:**	- 0.00		**PF3:**	- 0.00	
PFΣ :	0.00		**PFH:**	0.00				
Φ1:	- 0.0°		**Φ2:**	- 0.0°		**Φ3:**	- 0.0°	
WH:	0.000	KWH				**SH:**	0.000	KVAH
QH:	0.000	KVARH				**FREQ:**	0.0	Hz

CP1201

20A **3Φ4W** **SEC: 2** **CT: 1** **PT: 1**

5-6 ZERO adjustment for Watt Hour

If reset the " Exit key button " (3-8, Fig. 1) continuously and > 6 seconds, the measurement value of " WH ", " SH ", " QH " will reset to Zero value.

5-7 Harmonic Function Measurement

1) Press " Harmonic Key " (3-25, Fig. 1) will enter the Screen 1.
2) Press " V/A 1. 2. 3 Key " (3-27, Fig. 1) will enter the Screen 2.
3) If the wave show the distortion, Press " V/A range Key " (3-28, Fig. 1), switch to VH or AH to let the wave form not existing distortion as Screen 3, Screen 4.
4) Press " Left Key " (3-24, Fig. 1) or " Right Key " (3-26, Fig. 1) will show the voltage or current Nth harmonic value

Screen 1 (5-7)

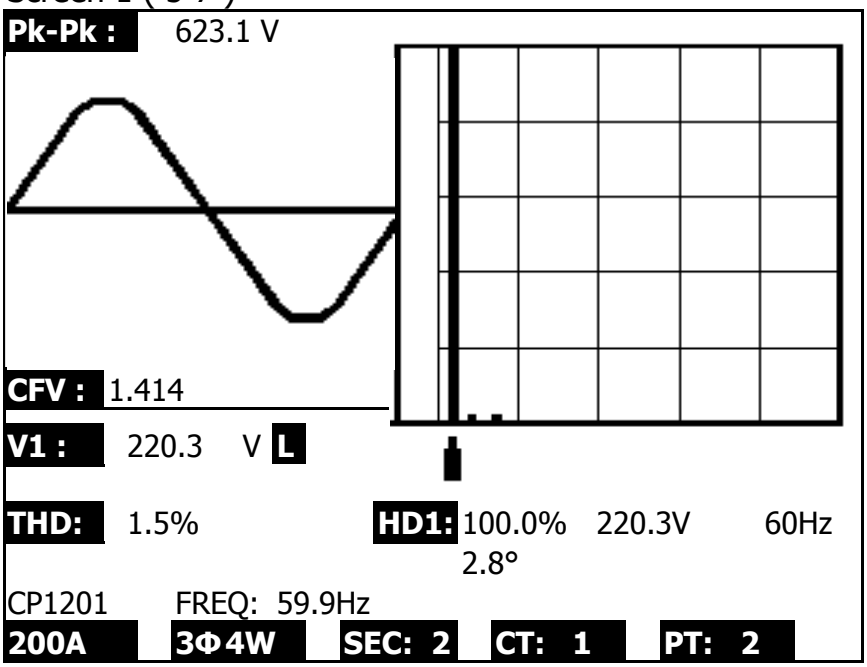

Screen 2 (5-7)

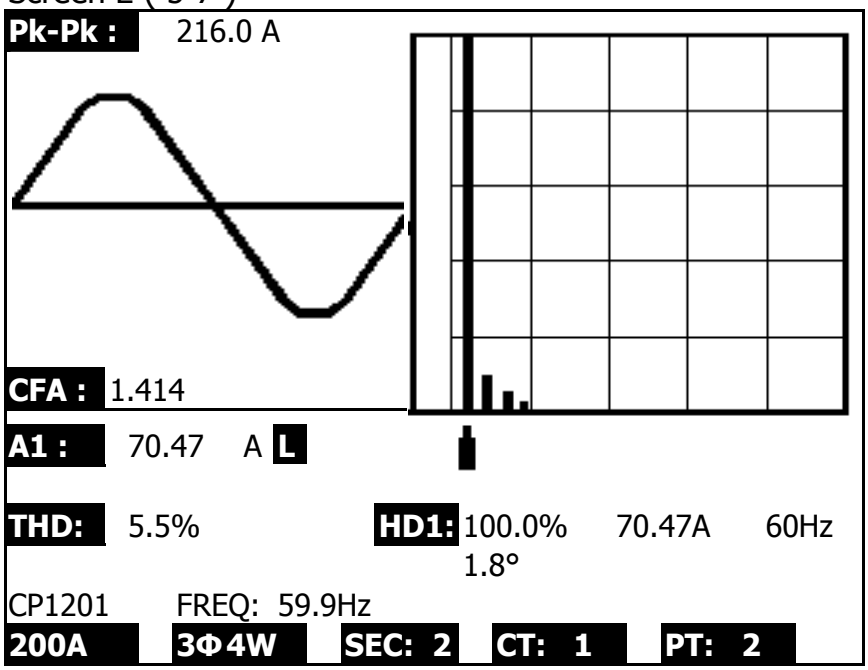

Screen 3 (5-7)

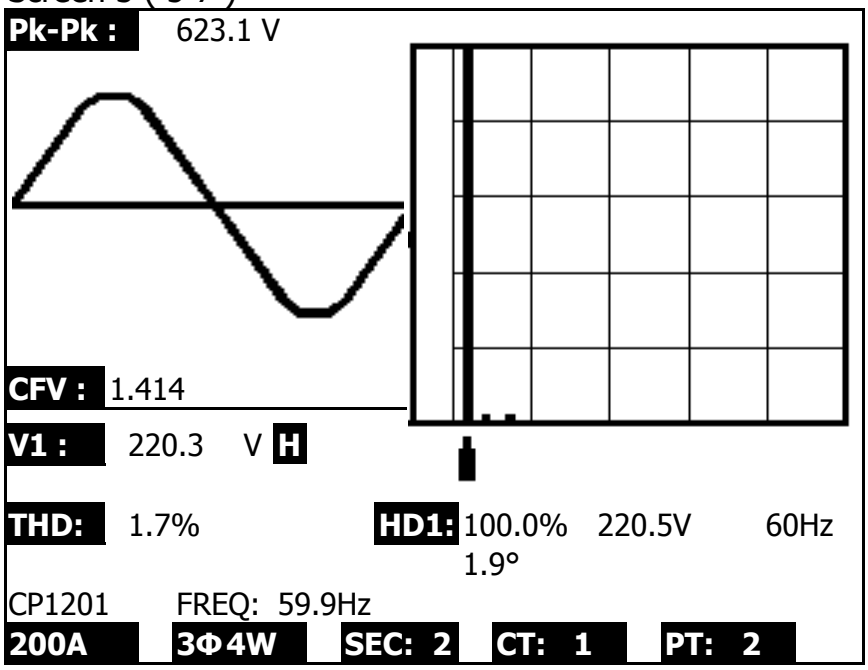

Screen 4 (5-7)

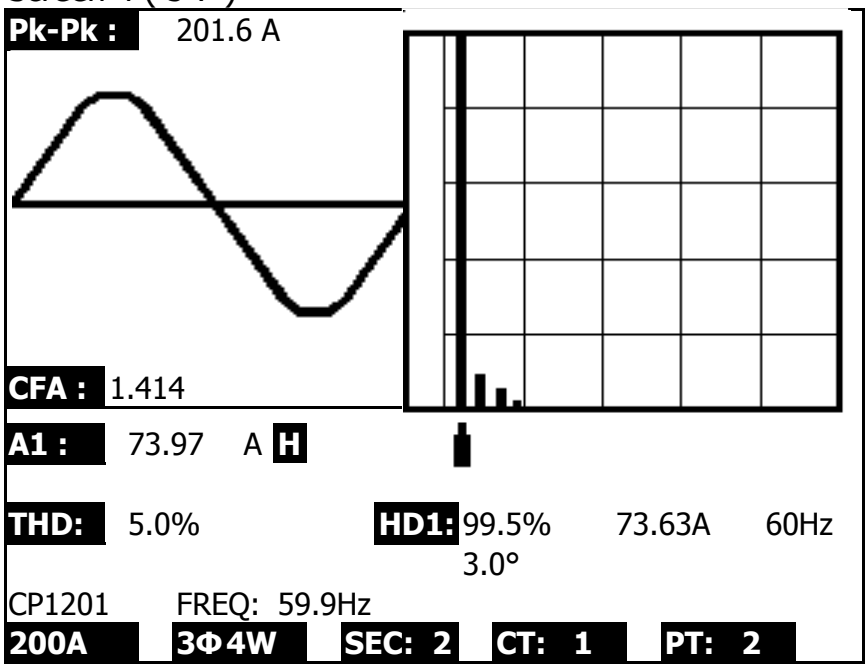

5-8 Graphic Phasor Diagram

1) Press " Phase Diagram Key " (3-30, Fig. 1) will display the phasor diagram as the Screen 1.
2) Description of phasor diagram :
   a. V1, V2, V3 :
   Phase voltages in phasor format with respect to V1.
   A1, A2, A3 :
   Line currents in phasor format with respect to A1.
   b. AVE :
   Average of the line voltages V12, V23 and V31 an the line current A1, A2 and A3.
   c. AVn :
   Calculated voltage and current of neutral with respect to ground.
   d. dV% :
   Historical maximum % value of
   (Max. (V1, V2, V3) - Min. (V1, V2, V3))/
   Min. (V1, V2, V3) * 100%
   e. VUR : Voltage unbalance ratio.

f. do2 (do, d2) :

* do - The first number is Zero Sequence Unbalance Ratio in % (d0) of voltage or current.
* d2 - The second number is the Negative Sequence Unbalance Ratio in % (d2) of voltage or current.

g. dA% :

Historical maximum % value of
(Max. (A1, A2, A3) - Min. (A1, A2, A3))/
Min. (A1, A2, A3) * 100%

h. AUR :

Current unbalance ratio.

Screen 1 (5-8)

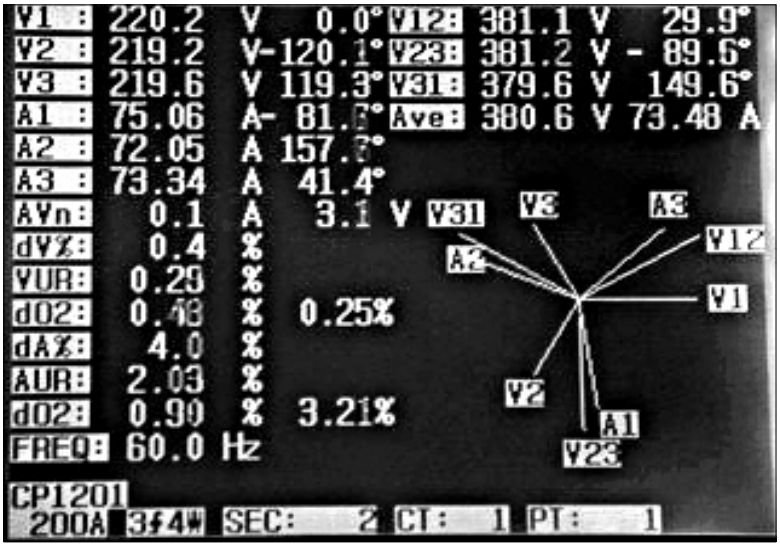

Screen 2 (5-8)

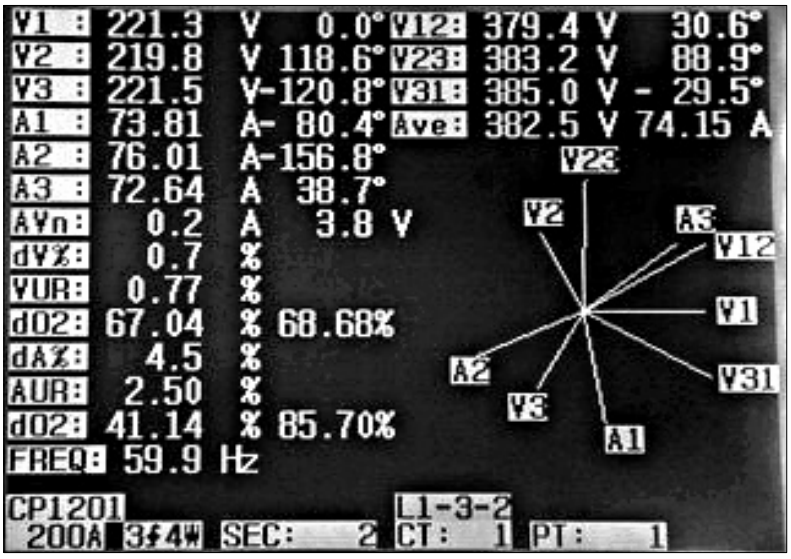

5-9 Voltage/Current Waveform

1) Press " Waveform Key " (3-31, Fig. 1) will enter to Voltage Waveform screen as Screen 1, then Press " 1Φ /3Φ Key " (3-2, Fig. 1) once in sequence will switch the Voltage waveform from V1 to V2, V3.
2) Press " Waveform Key " (3-31, Fig. 1) once again will enter to Current Waveform screen as Screen 2, then " 1Φ /3Φ Key " (3-2, Fig. 1) once in sequence will switch the Current waveform from A1 to A2, A3.
3) Press " Waveform Key " (3-31, Fig. 1) once again will enter to Voltage/Current Waveform screen as Screen 3, then press " 1Φ /3Φ Key " (3-2, Fig. 1) once in sequence will switch the Voltage/Current waveform from V1/A1 to V2/A2, V3/A3.

Screen 1 (5-9)

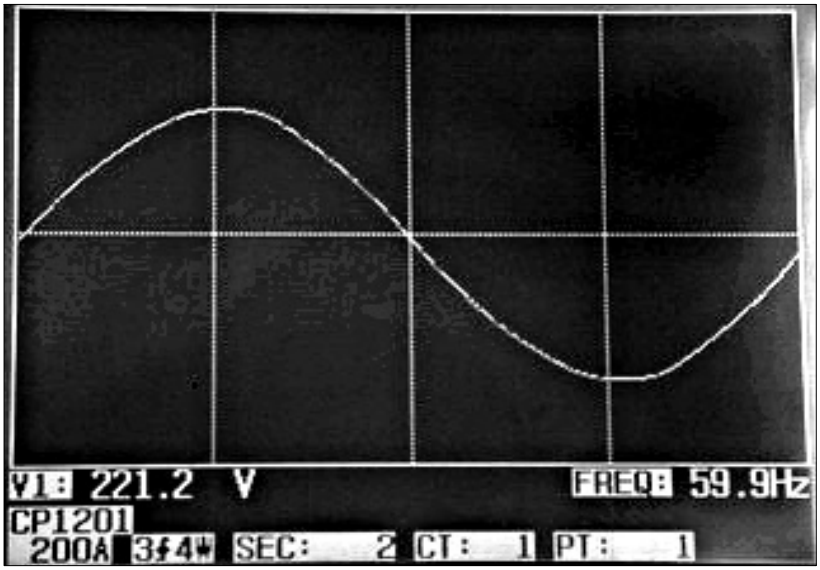

Screen 2 (5-9)

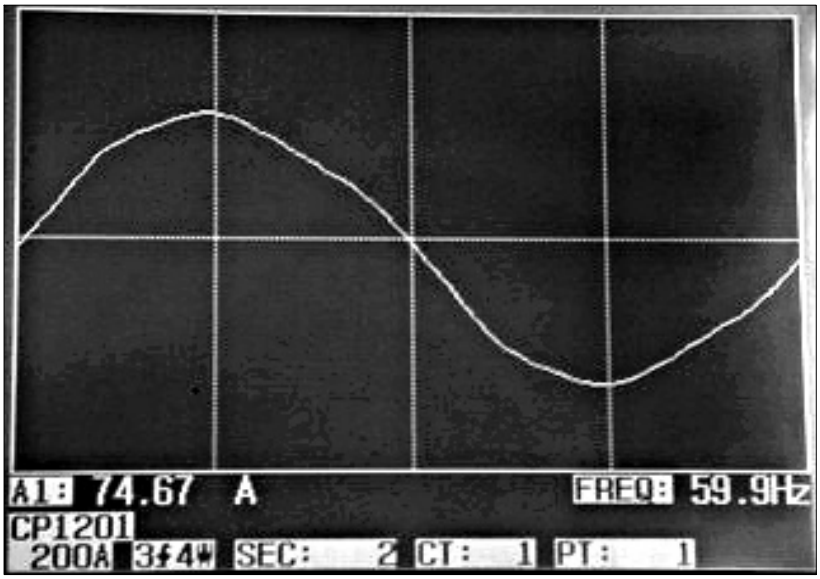

Screen 3 (5-9)

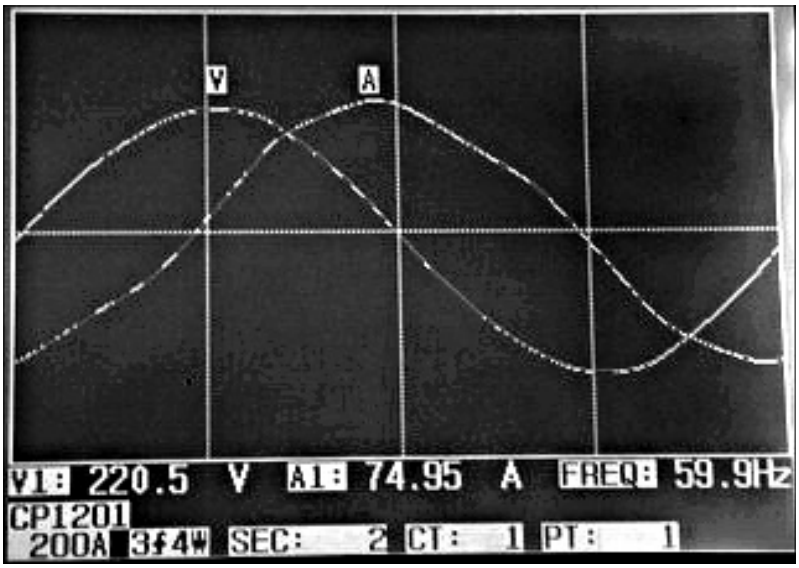

5-10 Transient Capture (Dips, Swells, Outage)

1) If intend to make the Transient Capture measurement it should set the transient voltage level (high level, low level) at first , the setting procedures, please refere to chapter 4-5-9 and chapter 4-5-10.
2) Press " Transient Key " (3-32, Fig. 1) will enter to Transient Capture screen, insert the SD memory card then press the " REC Button " (3-9, Fig. 1) will make the measuremnt, refer as the Screen 1
3) Definition :
   a. SWELL :
      *Vrms > (Vref + (Vref * SDVP%))*
   b. DIP
      *Vrms < (Vref - (Vref * SDVP%))*
   c. OUTAGE
      Vrms < 30 V to 40 V.

d. Line item :
   * V is the code show the all phase V1, V2, V3 ever happen the transient event.
   * V1, V2, V3 is the code that show each phase V1, V2, V3 ever happen the transient event.
   * Refer to Screen 2.

4) Press the " REC Button " will exit the Transient Capture function as Screen 3.

5) One screen can show 13 transient events.
   One file can record 99 transient events.
   When the transient even more than 13 no, then press the " ▼ Button " , " ▲ Button " can show more transient events. If the transient events less than 13 no., " ▼ Button " , " ▲ Button " are disable.

Screen 1 (5-10)

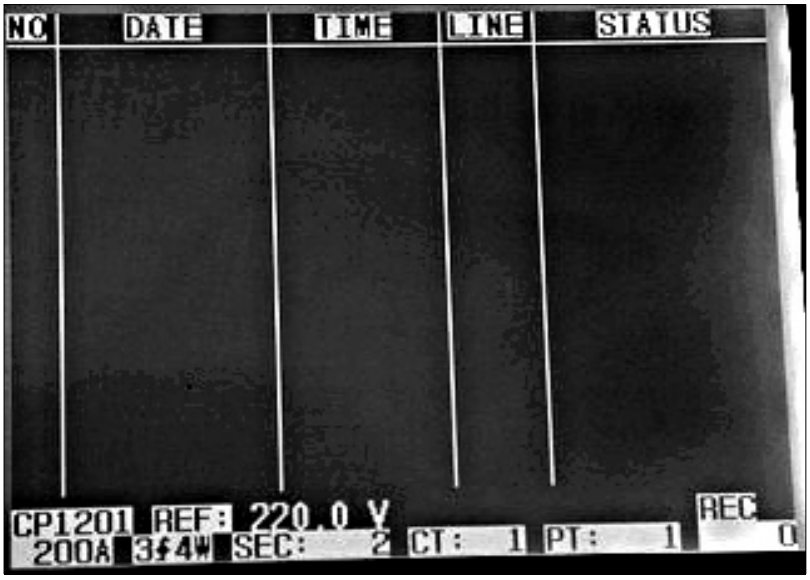

Remark :
When press " 1Φ 3Φ Button " (3-2, Fig. 1) once in insequence, it can switch to the the transient measurement of different Wire connections such as 1P2W, 1P3W, 3P3W, 3P4W.

Screen 2 (5-10)

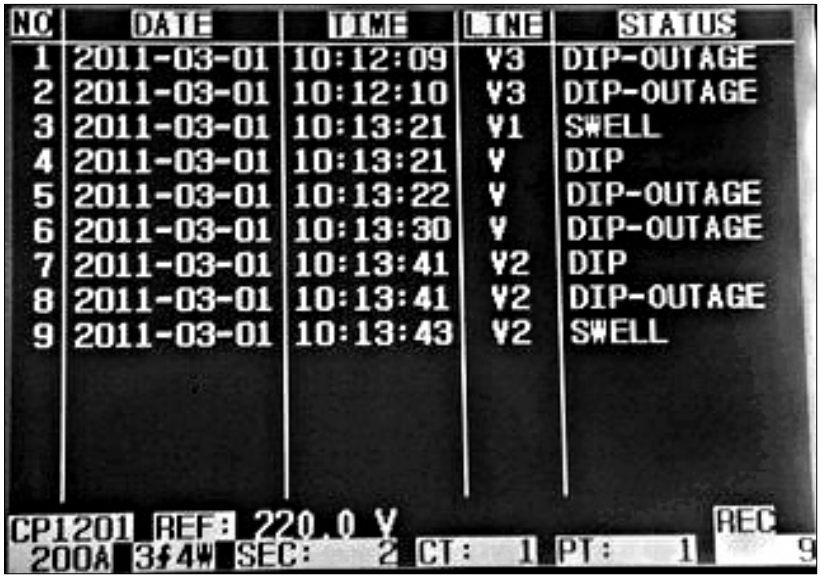

NO	DATE	TIME	LINE	STATUS
1	2011-03-01	10:12:09	V3	DIP-OUTAGE
2	2011-03-01	10:12:10	V3	DIP-OUTAGE
3	2011-03-01	10:13:21	V1	SWELL
4	2011-03-01	10:13:21	V	DIP
5	2011-03-01	10:13:22	V	DIP-OUTAGE
6	2011-03-01	10:13:30	V	DIP-OUTAGE
7	2011-03-01	10:13:41	V2	DIP
8	2011-03-01	10:13:41	V2	DIP-OUTAGE
9	2011-03-01	10:13:43	V2	SWELL

CP1201 REF: 220.0 V REC
200A 3ϕ4W SEC: 2 CT: 1 PT: 1 9

Screen 3 (5-10)

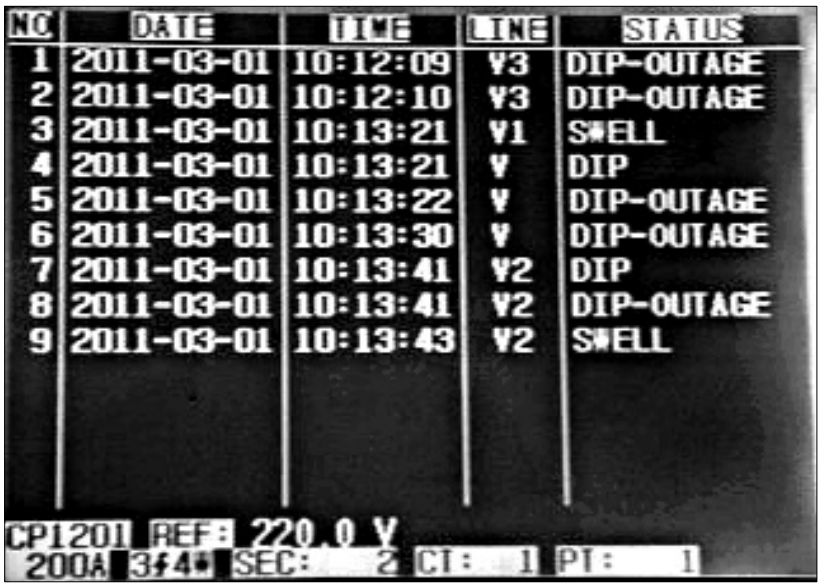

NO	DATE	TIME	LINE	STATUS
1	2011-03-01	10:12:09	V3	DIP-OUTAGE
2	2011-03-01	10:12:10	V3	DIP-OUTAGE
3	2011-03-01	10:13:21	V1	SWELL
4	2011-03-01	10:13:21	V	DIP
5	2011-03-01	10:13:22	V	DIP-OUTAGE
6	2011-03-01	10:13:30	V	DIP-OUTAGE
7	2011-03-01	10:13:41	V2	DIP
8	2011-03-01	10:13:41	V2	DIP-OUTAGE
9	2011-03-01	10:13:43	V2	SWELL

CP1201 REF: 220.0 V
200A 3ϕ4W SEC: 2 CT: 1 PT: 1

5-11 Data Logger Function

A : Press REC KEY once to start the data record function.

A-1 : If the bottom right shows as " Change Card ", it indicates the memory space is already full either or the SD CARD exist some wrong.

A-2 : If the SD CARD is normal, the data logger function will start to be executed.

V12:	0.0 V		**V1:**	0.0 V		**A1:**	0.00 A	
V23:	0.0 V		**V2:**	0.0 V		**A2:**	0.00 A	
V31:	0.0 V		**V3:**	0.0 V		**A3:**	0.00 A	
P1:	- 0.000 KW		**S1:**	0.000 KVA		**Q1:**	- 0.000 KVAR	
P2:	- 0.000 KW		**S2:**	0.000 KVA		**Q2:**	- 0.000 KVAR	
P3:	- 0.000 KW		**S3:**	0.000 KVA		**Q3:**	- 0.000 KVAR	
PΣ	- 0.000 KW		**SΣ :**	0.000 KVA		**QΣ :**	- 0.000 KVAR	
PF1:	- 0.00	**PF2:**	- 0.00			**PF3:**	- 0.00	
PFΣ :	0.00	**PFH:**	0.00					
Φ1:	- 0.0°		**Φ2:**	- 0.0°		**Φ3:**	- 0.0°	
WH:	0.000 KWH				**SH:**	0.000 KVAH		
QH:	0.000 KVARH				**FREQ:**	0.0 Hz		
CP1201								**Change**
20A	**3Φ4W**	**SEC: 2**	**CT: 1**		**PT: 1**			**Card**

B : The bottom right display will show the recorded data points.

B-1 : Each file can record up to 30,000 data points as screen 1 when the record points exceed 30,000 points, system will create a new file automatically. (For example, WTA01001.XLS will be replaced by WTA01002.XLS)

B-2 : While pressing REC KEY twice, the data logger function will stop to execute, the record points will disappear on bottom right display as screen 2.

screen 1 (5-11 B)

V12:	0.0	V	V1:	0.0	V	A1:	0.00	A
V23:	0.0	V	V2:	0.0	V	A2:	0.00	A
V31:	0.0	V	V3:	0.0	V	A3:	0.00	A
P1:	- 0.000	KW	S1:	0.000	KVA	Q1:	- 0.000	KVAR
P2:	- 0.000	KW	S2:	0.000	KVA	Q2:	- 0.000	KVAR
P3:	- 0.000	KW	S3:	0.000	KVA	Q3:	- 0.000	KVAR
PΣ	- 0.000	KW	SΣ :	0.000	KVA	QΣ :	- 0.000	KVAR
PF1:	- 0.00		PF2:	- 0.00		PF3:	- 0.00	
PFΣ :	0.00		PFH:	0.00				
Φ1:	- 0.0°		Φ2:	- 0.0°		Φ3:	- 0.0°	
WH:	0.000	KWH				SH:	0.000	KVAH
QH:	0.000	KVARH				FREQ:	0.0	Hz

CP1201 REC

20A 3Φ4W SEC: 2 CT: 1 PT: 1 9

screen 2 (5-11 B)

V12:	0.0	V	V1:	0.0	V	A1:	0.00	A
V23:	0.0	V	V2:	0.0	V	A2:	0.00	A
V31:	0.0	V	V3:	0.0	V	A3:	0.00	A
P1:	- 0.000	KW	S1:	0.000	KVA	Q1:	- 0.000	KVAR
P2:	- 0.000	KW	S2:	0.000	KVA	Q2:	- 0.000	KVAR
P3:	- 0.000	KW	S3:	0.000	KVA	Q3:	- 0.000	KVAR
PΣ	- 0.000	KW	SΣ :	0.000	KVA	QΣ :	- 0.000	KVAR
PF1:	- 0.00		PF2:	- 0.00		PF3:	- 0.00	
PFΣ :	0.00		PFH:	0.00				
Φ1:	- 0.0°		Φ2:	- 0.0°		Φ3:	- 0.0°	
WH:	0.000	KWH				SH:	0.000	KVAH
QH:	0.000	KVARH				FREQ:	0.0	Hz

CP1201

20A 3Φ4W SEC: 2 CT: 1 PT: 1

5-12 Data HOLD Function

A: During the measurement, press HOLD KEY once, the bottom right display will show " HOLD symbol as screen 1.

B: Press the HOLD KEY twice will disable the Data HOLD function and the " HOLD" symbol will disappear in the meantime

screen 1 (5-12)

```
V12:    0.0  V        V1:    0.0  V        A1:    0.00   A
V23:    0.0  V        V2:    0.0  V        A2:    0.00   A
V31:    0.0  V        V3:    0.0  V        A3:    0.00   A

P1:  -  0.000 KW      S1:    0.000 KVA     Q1:  -  0.000 KVAR
P2:  -  0.000 KW      S2:    0.000 KVA     Q2:  -  0.000 KVAR
P3:  -  0.000 KW      S3:    0.000 KVA     Q3:  -  0.000 KVAR

PΣ   -  0.000 KW      SΣ :   0.000 KVA     QΣ :   -  0.000 KVAR
PF1:    -  0.00     PF2:   -  0.00        PF3:   -  0.00
PFΣ :     0.00      PFH:     0.00
Φ1:     -  0.0°       Φ2:  -  0.0°          Φ3:  -  0.0°

WH:   0.000 KWH                SH:    0.000 KVAH
QH:   0.000 KVARH              FREQ:  0.0      Hz

CP1201
    20A   3Φ4W    SEC:  2   CT:    1   PT:    1   HOLD
```

screen 2 (5-12)

```
V12:    0.0  V        V1:    0.0  V        A1:    0.00   A
V23:    0.0  V        V2:    0.0  V        A2:    0.00   A
V31:    0.0  V        V3:    0.0  V        A3:    0.00   A

P1:  -  0.000 KW      S1:    0.000 KVA     Q1:  -  0.000 KVAR
P2:  -  0.000 KW      S2:    0.000 KVA     Q2:  -  0.000 KVAR
P3:  -  0.000 KW      S3:    0.000 KVA     Q3:  -  0.000 KVAR

PΣ   -  0.000 KW      SΣ :   0.000 KVA     QΣ :   -  0.000 KVAR
PF1:    -  0.00     PF2:   -  0.00        PF3:   -  0.00
PFΣ :     0.00      PFH:     0.00
Φ1:     -  0.0°       Φ2:  -  0.0°          Φ3:  -  0.0°

WH:   0.000 KWH                SH:    0.000 KVAH
QH:   0.000 KVARH              FREQ:  0.0      Hz

CP1201
    20A   3Φ4W    SEC:  2   CT:    1   PT:    1
```

5-13 BACKLIGHT KEY
Control the backlight function of LCD to ON/OFF

5-14 A Range (Current Range) KEY function

a) The A Range (Current Range) function key is used to change the current range quickly.
b) Press A RANGE KEY once will entry to screen as following " screen 1 (5-14) " , it is the same screen as " screen 2 (4-5-13) , page 37 ".
c) The detail Current range Setting procedures, please reafer to section " 4-5-13 A range Setting (Current range Setting), page 37 "

Remark :
The function of the " A Range (Current Range) key " is available for the Clamp Type, A Range, V Range setting only.

screen 1 (5-14) same as screen 2 (4-5-13)

Folder Name:	WTA01					**SETUP**
File Name:	3P401001.XLS					
REC Date:	2008-11-28 00:03:17					
Sampling Time:	2	Trans Ref :	220.0 V			
Delete File:	0 %	SDVP	0			
SD Format:	0 %	Decimal:	Basic			
Use Size:	388 KB	Clamp Type:	CP1201			
Free Size:	1946 MB	**A Range:**	200A			
Total Size:	1946 MB	V Range:	200mV			
		RS232 Out Sel:				
PT:	1 : 1	V1	I1	P1		
CT:	1 : 1	S1	Q1	PF1		
Beep: ON		Φ1	FREQ			
Year	Month	Date	Hour	Minute	Second	
2010	11	13	14	37	25	

5-15 The LOWBAT screen: as show on lower right display of the following screen.

V12:	0.0	V	**V1:**	0.0	V	**A1:**	0.00	A
V23:	0.0	V	**V2:**	0.0	V	**A2:**	0.00	A
V31:	0.0	V	**V3:**	0.0	V	**A3:**	0.00	A
P1:	- 0.000	KW	**S1:**	0.000	KVA	**Q1:**	- 0.000	KVAR
P2:	- 0.000	KW	**S2:**	0.000	KVA	**Q2:**	- 0.000	KVAR
P3:	- 0.000	KW	**S3:**	0.000	KVA	**Q3:**	- 0.000	KVAR
PΣ	- 0.000	KW	**SΣ :**	0.000	KVA	**QΣ :**	- 0.000	KVAR
PF1:	- 0.00		**PF2:**	- 0.00		**PF3:**	- 0.00	
PFΣ :	0.00		**PFH:**	0.00				
Φ1:	- 0.0°		**Φ2:**	- 0.0°		**Φ3:**	- 0.0°	
WH:	0.000	KWH	**SH:**	0.000	KVAH			
QH:	0.000	KVARH	**FREQ:**	0.0	Hz			

CP1201 **LOWBAT**

20A **3Φ4W** **SEC: 2** **CT: 1** **PT: 1**

5-16 Appendix 1

* V12, V23, V31 : Line Voltage
* V1, V2, V3 : Phase Voltage
* A1, A2, A3 : Line Current
* P1, P2, P3 : True Power of each phase. (W)
* S1, S2, S3 : Apparent Power of each phase. (VA)
* Q1, Q2, Q3 : Reactive Power of each phase (VAR)
* PΣ : Total True Power (W)
* SΣ : Total Apparent Power (VA)
* QΣ : Total Reactive Power (VAR)
* PF1, PF2, PF3 : Power Factor of each phase
* PFΣ : Total Power Factor
* PFH : Long Term Average Power Factor (WH/SH)
* Φ 1, Φ 2, Φ 3 : Phase Angle of each phase
* WH : Watt Hour
* SH : Apparent Power Hour
* QH : Reactive Power Hour
* 1Φ 2W : One phase by two wires
* 1Φ 3W : One phase by three wires
* 3Φ 3W : Three phases by three wires
* 3Φ 4W : Three phases by four wires
* SEC : The sampling time of data logger
* CT : Current transformer
* PT : Potential transformer

6. MAINTENANCE

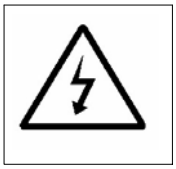

Caution : ***Remove test leads before opening the battery cover or housing case !***

6-1 Cleaning

Caution : ***Cleaning - Only use the dry cloth to clean the plastic case !***

6-2 Replacement of batteries

1) When Display show the " LOWBAT " indicator (ref. 5-15 page 67), it should change the batteries.
2) open the " Battery Cover " (3-19, Fig. 1) away from the instrument and remove the battery.
3) Replace with batteries (DC 1.5V, AA/UM-3 battery X 8 PCs) and reinstate the cover.

   **** When install the batteries, should make attention the battery polarity.***

4) Make sure the battery cover is secured after changing the batteries.

7. RS232 PC SERIAL OUTPUT

The instrument is provided an 3.5 mm dia. phone socket (3-16, Fig. 1) for RS232 computer interface socket.

The connector output is a 16 digits data stream which can be utilized to the user's specific application.

A RS232 lead with the following connection will be required to link the instrument with the PC serial input.

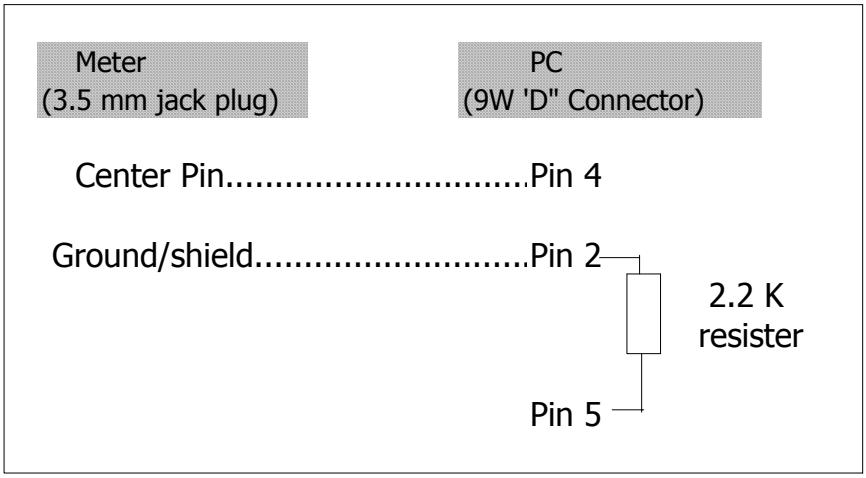

The 16 digits data stream will be displayed in the following format :

D15	D14	D13	D12	D11	D10	D9	D8	D7	D6	D5	D4	D3	D2	D1	D0

Each digit indicate the following status :

D15	Start Word		
D14	4		
D13	1		
D12 & D11	Annunciator for Display		
	03=%	B9 = MACA	D0 = MW/Hr
	31=HZ	C0 = MW	D1 = GW/Hr
	32=DEGREE	C1 = GW	D2 = TW/Hr
	48=K WATT	C2 = TW	D3 = KVA/Hr
	50=ACV	C3 = MVA	D4 = MVA/Hr
	52=ACA	C4 = GVA	D5 = GVA/Hr
	64=KVA	C5 = TVA	D6 = TVA/Hr
	65=KW/HR	C6 = KVAR	D7 = KVAR/Hr
	B6 = KACV	C7 = MVAR	D8 = MVAR/Hr
	B7 = MACV	C8 = GVAR	D9 = GVAR/Hr
	B8 = KACA	C9 = TVAR	E0 = TVAR/Hr
D10	Polarity 0 = Positive 1 = Negative		
D9	Decimal Point(DP), position from right to the left 0 = No DP, 1= 1 DP, 2 = 2 DP, 3 = 3 DP		
D8 to D1	Display reading, D1 = LSD, D8 = MSD For example : If the display reading is 1234, then D8 to D1 is : 00001234		
D0	End Word		

RS232 setting

Baud rate	9600
Parity	No parity
Data bit no.	8 Data bits
Stop bit	1 Stop bit

8. Download the saving data from the SD card to the computer (EXCEL software)

1) After execute the Data Logger function, take away the SD card out from the " SD card socket " (3-15, Fig. 1).
2) Plug in the SD card into the Computer's SD card slot (if your computer build in this installation) or insert the SD card into the " SD card adapter ". then connect the " SD card adapter " into the computer.
3) Power ON the computer and run the " EXCEL software ". Down load the saving data file (for example the file name : 3P401001.XLS, 1P201001.XLS, 1P301001.XLS, 3P301001.XLS.....) from the SD card to the computer. The saving data will present into the EXCEL software screen (for example as following EXCEL data screens) , then user can use those EXCEL data to make the further Data or Graphic analysis usefully.

EXCEL data screen 1 (for example)

K21 =

	A	B	C	D	E	F	G	H	I	J	K	L
1	Position	Date	Time	V12	Unit	V23	Unit	V31	Unit	V1	Unit	V2
2	0	2009/1/14	08:58:53	0	ACV	0	ACV	0	ACV	0	ACV	0
3	0	2009/1/14	08:58:55	0	ACV	0	ACV	0	ACV	0	ACV	0
4	0	2009/1/14	08:58:57	0	ACV	0	ACV	0	ACV	0	ACV	0
5	0	2009/1/14	08:58:59	0	ACV	0	ACV	0	ACV	0	ACV	0
6	0	2009/1/14	08:59:01	0	ACV	0	ACV	0	ACV	0	ACV	0
7	0	2009/1/14	08:59:03	0	ACV	0	ACV	0	ACV	0	ACV	0
8	0	2009/1/14	08:59:05	0	ACV	0	ACV	0	ACV	0	ACV	0
9	0	2009/1/14	08:59:07	0	ACV	0	ACV	0	ACV	0	ACV	0
10	0	2009/1/14	08:59:09	0	ACV	0	ACV	0	ACV	0	ACV	0
11	0	2009/1/14	08:59:11	0	ACV	0	ACV	0	ACV	0	ACV	0
12												
13												

EXCEL data screen 2 (for example)

ZZ1 =

	N	O	P	Q	R	S	T	U	V	W	X	Y
1	V3	Unit	A1	Unit	A2	Unit	A3	Unit	P1	Unit	P2	Unit
2	0	ACV	0	ACA	0	ACA	0	ACA	0	KW	0	KW
3	0	ACV	0	ACA	0	ACA	0	ACA	0	KW	0	KW
4	0	ACV	0	ACA	0	ACA	0	ACA	0	KW	0	KW
5	0	ACV	0	ACA	0	ACA	0	ACA	0	KW	0	KW
6	0	ACV	0	ACA	0	ACA	0	ACA	0	KW	0	KW
7	0	ACV	0	ACA	0	ACA	0	ACA	0	KW	0	KW
8	0	ACV	0	ACA	0	ACA	0	ACA	0	KW	0	KW
9	0	ACV	0	ACA	0	ACA	0	ACA	0	KW	0	KW
10	0	ACV	0	ACA	0	ACA	0	ACA	0	KW	0	KW
11	0	ACV	0	ACA	0	ACA	0	ACA	0	KW	0	KW
12												
13												

EXCEL data screen 3 (for example)

AL21 =

	Z	AA	AB	AC	AD	AE	AF	AG	AH	AI	AJ	AK
1	P3	Unit	P(SUM)	Unit	S1	Unit	S2	Unit	S3	Unit	S(SUM)	Unit
2	0	KW	0	KW	0	KVA	0	KVA	0	KVA	0	KVA
3	0	KW	0	KW	0	KVA	0	KVA	0	KVA	0	KVA
4	0	KW	0	KW	0	KVA	0	KVA	0	KVA	0	KVA
5	0	KW	0	KW	0	KVA	0	KVA	0	KVA	0	KVA
6	0	KW	0	KW	0	KVA	0	KVA	0	KVA	0	KVA
7	0	KW	0	KW	0	KVA	0	KVA	0	KVA	0	KVA
8	0	KW	0	KW	0	KVA	0	KVA	0	KVA	0	KVA
9	0	KW	0	KW	0	KVA	0	KVA	0	KVA	0	KVA
10	0	KW	0	KW	0	KVA	0	KVA	0	KVA	0	KVA
11	0	KW	0	KW	0	KVA	0	KVA	0	KVA	0	KVA
12												
13												

EXCEL data screen 4 (for example)

AX21 =

	AL	AM	AN	AO	AP	AQ	AR	AS	AT	AU	AV	AW
1	Q1	Unit	Q2	Unit	Q3	Unit	Q(SUM)	Unit	PF1	Unit	PF2	Unit
2	0	KVAR	0	KVAR	0	KVAR	0	KVAR	0		0	
3	0	KVAR	0	KVAR	0	KVAR	0	KVAR	0		0	
4	0	KVAR	0	KVAR	0	KVAR	0	KVAR	0		0	
5	0	KVAR	0	KVAR	0	KVAR	0	KVAR	0		0	
6	0	KVAR	0	KVAR	0	KVAR	0	KVAR	0		0	
7	0	KVAR	0	KVAR	0	KVAR	0	KVAR	0		0	
8	0	KVAR	0	KVAR	0	KVAR	0	KVAR	0		0	
9	0	KVAR	0	KVAR	0	KVAR	0	KVAR	0		0	
10	0	KVAR	0	KVAR	0	KVAR	0	KVAR	0		0	
11	0	KVAR	0	KVAR	0	KVAR	0	KVAR	0		0	
12												
13												

EXCEL data screen 5 (for example)

BJ21 =

	AX	AY	AZ	BA	BB	BC	BD	BE	BF	BG	BH	BI
1	PF3	Unit	PF(SUM)	Unit	PFH	Unit	PHASE1	Unit	PHASE2	Unit	PHASE3	Unit
2	0		0		0		0	Degree	0	Degree	0	Degree
3	0		0		0		0	Degree	0	Degree	0	Degree
4	0		0		0		0	Degree	0	Degree	0	Degree
5	0		0		0		0	Degree	0	Degree	0	Degree
6	0		0		0		0	Degree	0	Degree	0	Degree
7	0		0		0		0	Degree	0	Degree	0	Degree
8	0		0		0		0	Degree	0	Degree	0	Degree
9	0		0		0		0	Degree	0	Degree	0	Degree
10	0		0		0		0	Degree	0	Degree	0	Degree
11	0		0		0		0	Degree	0	Degree	0	Degree
12												
13												

EXCEL data screen 6 (for example)

BV13 =

	BJ	BK	BL	BM	BN	BO	BP	BQ	BR	BS	BT	BU
1	WH	Unit	SH	Unit	QH	Unit	FREQ	Unit				
2	0	KWH	0	KVAH	0	KVARH	0	Hz				
3	0	KWH	0	KVAH	0	KVARH	0	Hz				
4	0	KWH	0	KVAH	0	KVARH	0	Hz				
5	0	KWH	0	KVAH	0	KVARH	0	Hz				
6	0	KWH	0	KVAH	0	KVARH	0	Hz				
7	0	KWH	0	KVAH	0	KVARH	0	Hz				
8	0	KWH	0	KVAH	0	KVARH	0	Hz				
9	0	KWH	0	KVAH	0	KVARH	0	Hz				
10	0	KWH	0	KVAH	0	KVARH	0	Hz				
11	0	KWH	0	KVAH	0	KVARH	0	Hz				
12												
13												

EXCEL graphic screen 1 (for example)

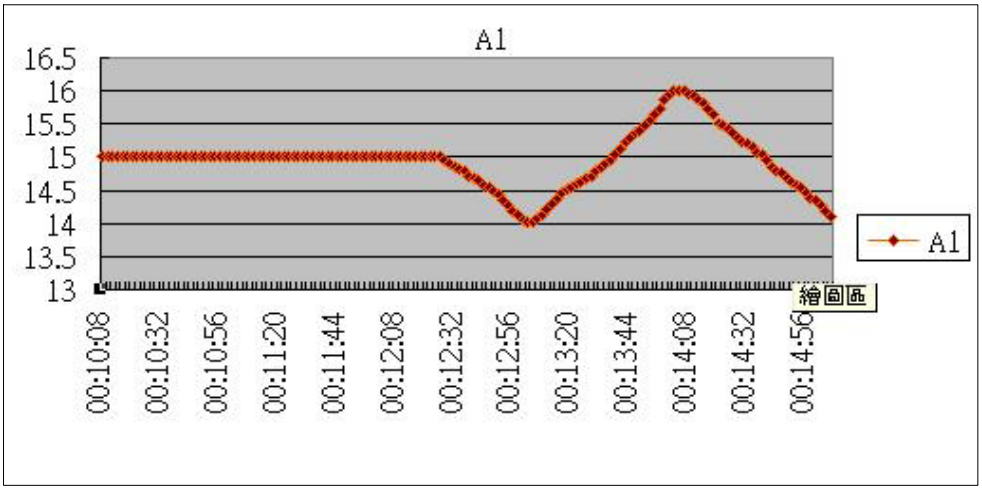

EXCEL graphic screen 2 (for example)

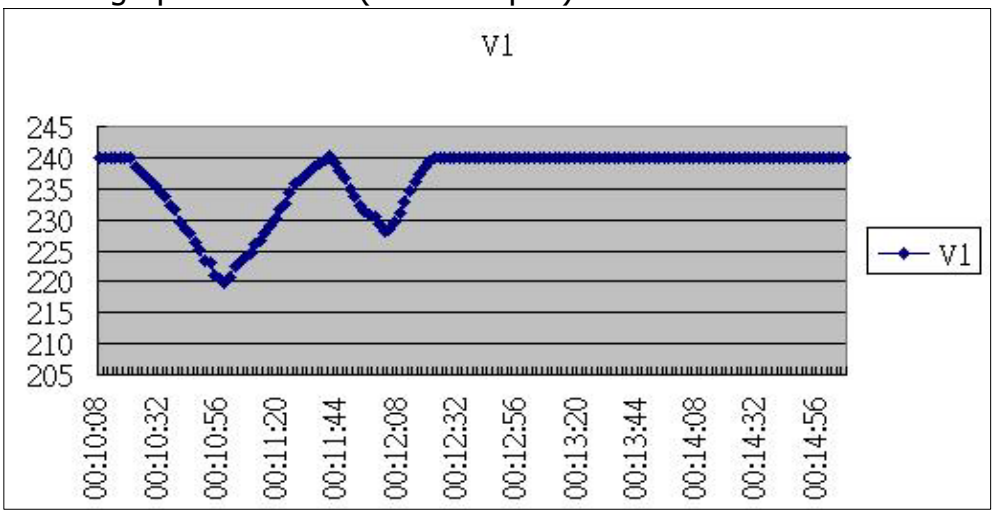

EXCEL graphic screen 3 (for example)

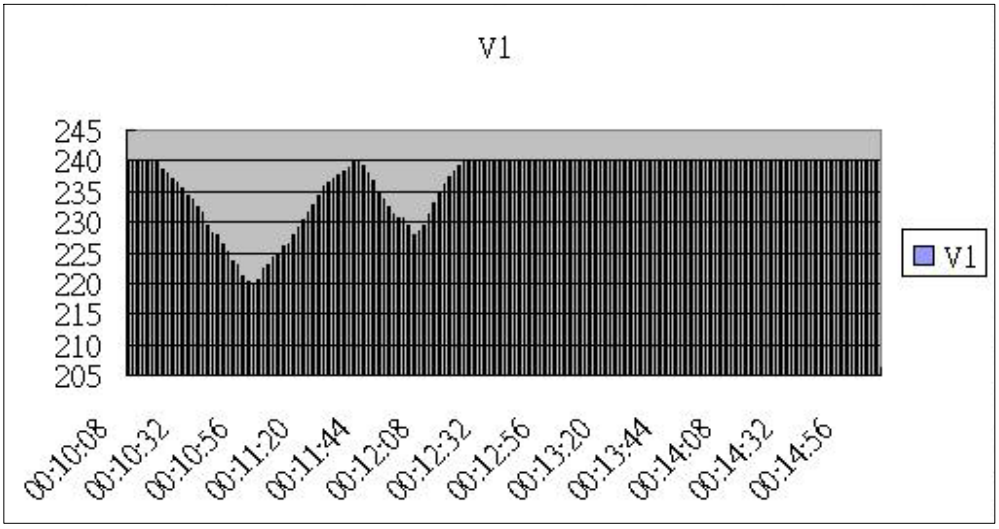

EXCEL graphic screen 4 (for example)

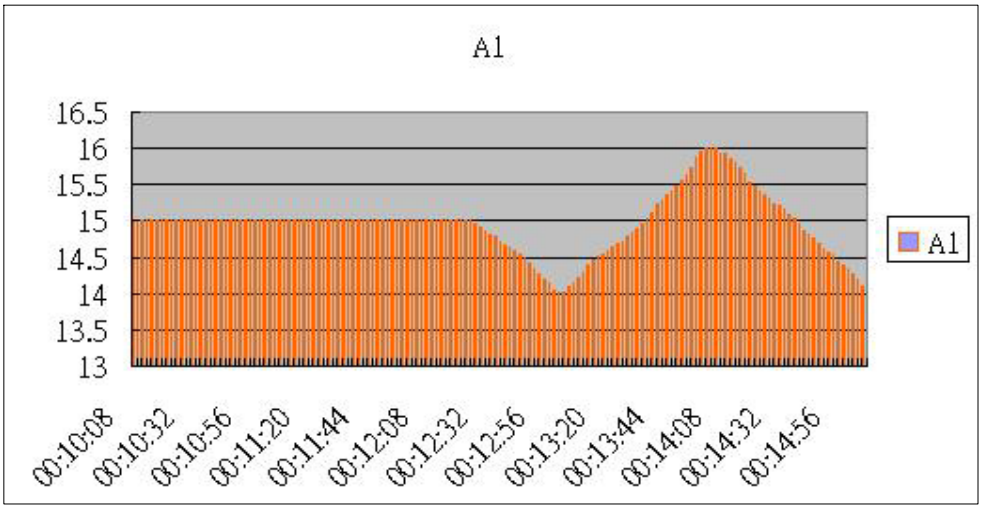

EXCEL graphic screen 5 (for example)

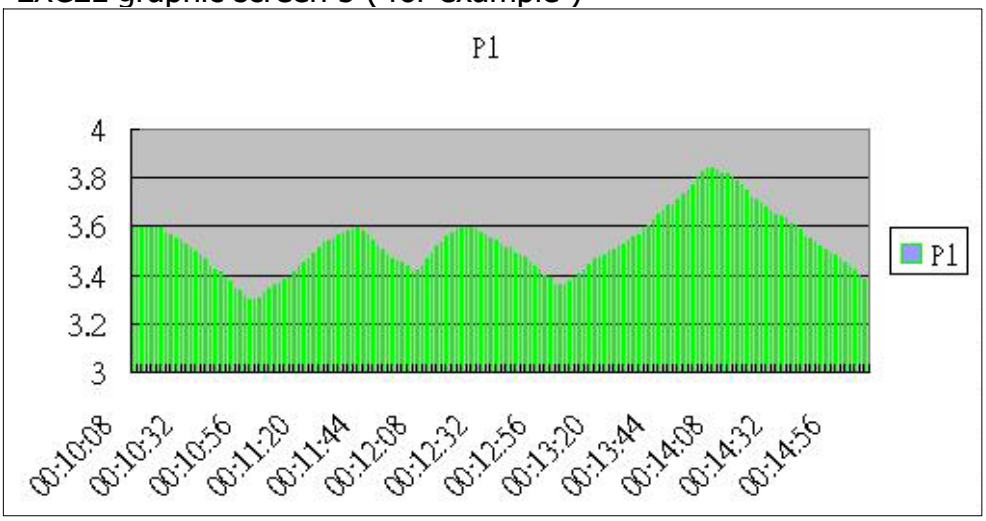

9. PATENT

The meter (SD card structure) already get patent or patent pending in following countries :

Germany	Nr. 20 2008 016 337.4
JAPAN	3151214
TAIWAN	M 358970 M 359043
CHINA	ZL 2008 2 0189918.5 ZL 2008 2 0189917.0
USA	Patent pending

10. THE ADDRESS OF AFTER SERVICE CENTER