English

User Manual

Platform Scales PCE-EP P Series

User manuals in various languages (français, italiano, español, português, nederlands, türk, polski, русский, 中文) can be found by using our product search on: www.pce-instruments.com

Last change: 3 August 2020
v1.0

© PCE Instruments

Contents

1 Safety notes 1

2 Technical specifications 2

3 Technical drawings 3

3.1 PCE-EP P1 series (platform size 400x500 mm) 3

3.2 PCE-EP P2 series (platform size 500x600 mm) 4

3.3 Display 5

4 Structure of the platform scales 6

5 Key description 9

6 Commissioning 10

7 Menu 14

8 Connection options 32

9 Connecting the balance to the PCE-BP1 printer 41

10 Connecting the balance to the USB data logger PCE-USM 42

11 Contact 44

12 Disposal 44

1 Safety notes

Please read this manual carefully and completely before you use the device for the first time. The device may only be used by qualified personnel and repaired by PCE Instruments personnel. Damage or injuries caused by non-observance of the manual are excluded from our liability and not covered by our warranty.

- The device must only be used as described in this instruction manual. If used otherwise, this can cause dangerous situations for the user and damage to the meter.
- The instrument may only be used if the environmental conditions (temperature, relative humidity, …) are within the ranges stated in the technical specifications. Do not expose the device to extreme temperatures, direct sunlight, extreme humidity or moisture.
- Do not expose the device to shocks or strong vibrations.
- The case should only be opened by qualified PCE Instruments personnel.
- Never use the instrument when your hands are wet.
- You must not make any technical changes to the device.
- The appliance should only be cleaned with a damp cloth. Use only pH-neutral cleaner, no abrasives or solvents.
- The device must only be used with accessories from PCE Instruments or equivalent.
- Before each use, inspect the case for visible damage. If any damage is visible, do not use the device.
- Do not use the instrument in explosive atmospheres.
- The measurement range as stated in the specifications must not be exceeded under any circumstances.
- Before each use, please check the platform scale by measuring a known quantity.
- Make sure that you use a suitable surface that does not transmit vibration or stand near heavy machinery.
- Avoid unstable power sources.
- Non-observance of the safety notes can cause damage to the device and injuries to the user.

We do not assume liability for printing errors or any other mistakes in this manual.

We expressly point to our general guarantee terms which can be found in our general terms of business.

If you have any questions please contact PCE Instruments. The contact details can be found at the end of this manual.

2 Technical specifications

	PCE-EP 30P	PCE-EP 150P
Weighing range	Max.1 = 15 kg / Max.2 = 30 kg *Dual range scales***	Max.1 = 60 kg / Max.2 = 150 kg *Dual range scales***
Resolution	up to 15 kg = 2 g over 15 kg … 30 kg = 5 g	up to 60 kg = 10 g over 60 kg … 150 kg = 20 g
Measurement uncertainty	±3 d (three times the resolution)	
Platform size	PCE-EP **P1** series **400 x 500** mm PCE-EP **P2** series **500 x 600** mm	
Tare function	Multiple tare over the full weighing range	
Functions	-Freely adjustable measuring unit kg / ... -PEAK / MAX weighing function -Summing function -Piece counting function -Animal weighing function -Limit value weighing function MIN / OK / MAX -Container weighing function (zero setting / initial weight display) -Filter function -Animal weighing function -Hold function (automatic or manual) -Automatic power off function (can be deactivated) -Integrated clock for time and date transfer, e. g. to printer	
Interface	RS-232 bidirectional / D-SUB 9 female **Optional at extra charge**: 4 potential-free outputs LO / OK / HI / *value stable* adjustable as pulse signal or continuous signal + analogue output 4-20 mA, resolution 1/1000	
Display	LCD with 25 mm digit height	
Units of measurement	kg / lb and a freely adjustable weighing unit such as kg/m	
Cable length to display	approx. 160 cm + plug	
Power supply	6 V / 4.5 Ah battery or 9 V / 1.2 A mains adaptor 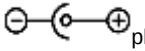 plug 5.5 x 2.5 G (current consumption approx. 70 mA) with optional switching contacts/analogue output, rechargeable battery operation is not possible → mains adaptor 12 V	
Protection class	IP54	

Operating conditions	0 ... + 40 °C / 10 ... 80 % RH
Weight	PCE-EP P1 series approx. 14 kg PCE-EP P2 series approx. 25.5 kg
Shipping dimensions	PCE-EP P1 series approx. 820 x 540 x 180 mm / 16.5 kg PCE-EP P2 series approx. 780 x 780 x 220 mm / 28 kg

Dual range balance**
A dual range balance is a balance that has two weighing ranges with two different resolutions. The advantage of such dual-range platform scales is the higher resolution in the lower weighing range without having to do without the high weighing range.

3 Technical drawings

3.1 PCE-EP P1 series (platform size 400x500 mm)

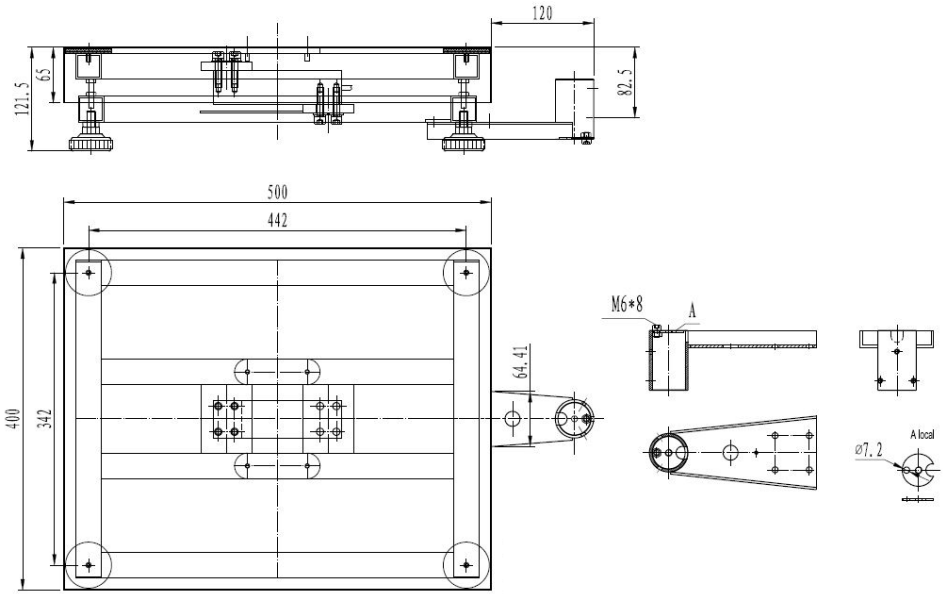

3.2 PCE-EP P2 series (platform size 500x600 mm)

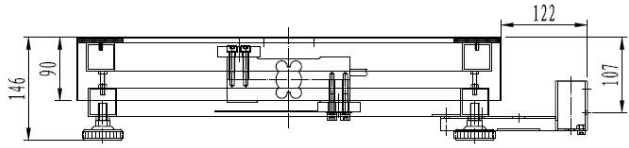

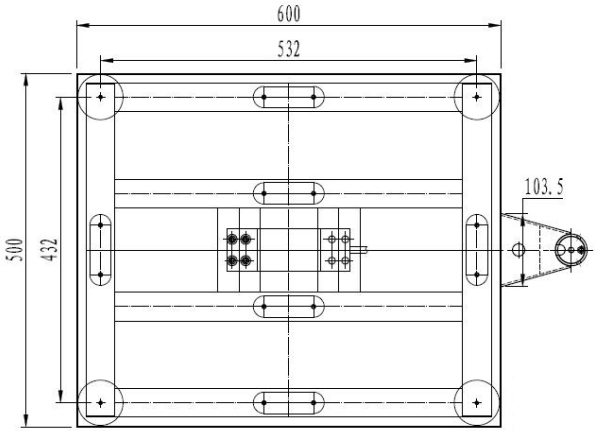

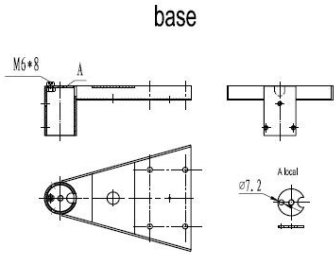

3.3 Display

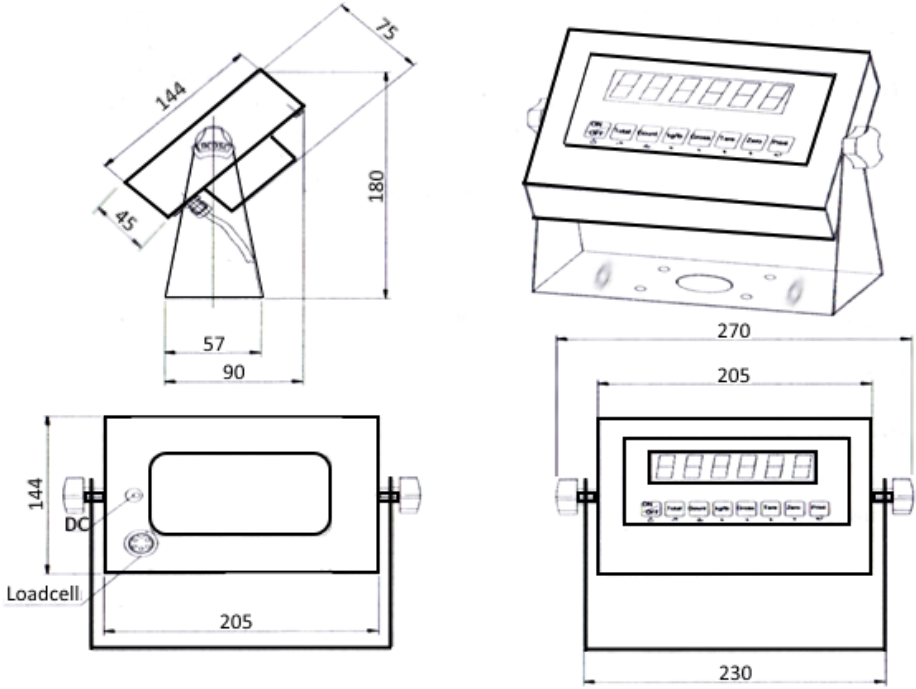

4 Structure of the platform scales

The scope of delivery includes all necessary parts and tools to make the balance ready for operation. Scope of delivery: 1. Weighing platform 2. Support tube 3. Display 4. U-shape display holder 5. Tools and screws 6. Tube-diplay holder	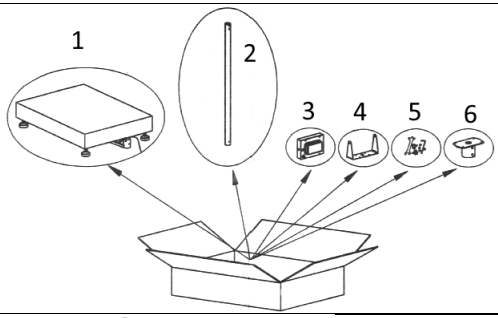
Take out the weighing platform (7) from the packaging and remove the stainless steel weighing platform. (8)	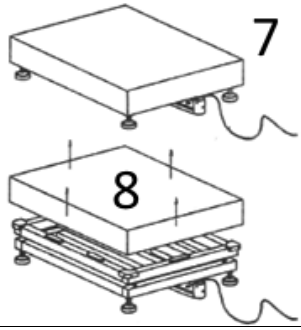
It is possible to use the scales with or without the support tube. If you wish to use them without the support tube, follow the steps described under TRANSPORTATION LOCK below and then detach the support tube mount (10) from the weighing platform. If you wish to set up the scale with the support tube, insert the cable (9) through the tube (2). Then use the screws (5) supplied to fasten the support tube (2) in the support tube mount (10).	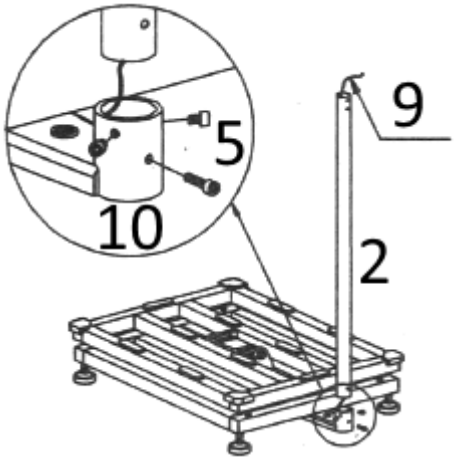

Now the cable (9) must be guided through the tube-display holder (6) and then through the U-shape display holder (4). Before the brackets (4) (6) are screwed together, the cable length must be selected in a way that the display can be adjusted easily and safely. The rest of the cable (9) should be safely stored in the support tube (2). The cable should be bent as little as possible to avoid cable breaks.	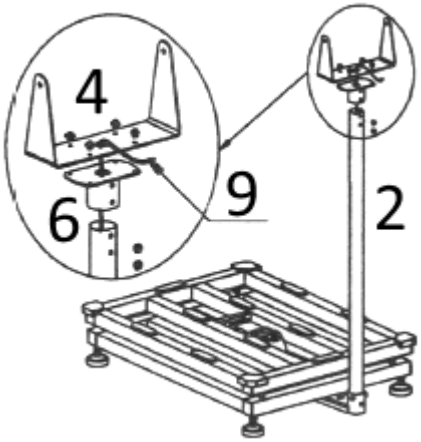
The display (3) must now be screwed onto the U-shape display holder (4). The inclination of the display can be varied with the adjusting screws. The cable (9) must then be plugged into the corresponding socket (11) on the rear of the display and screwed into place.	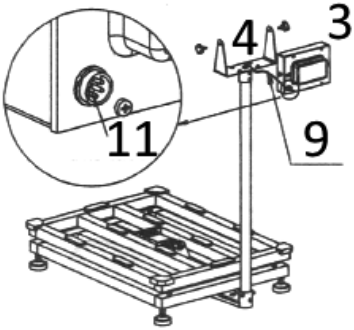

TRANSPORTATION LOCK

To protect the load cell from overload during transport, the balance is equipped with a transport lock. This is in the form of 4 screws (13) located between the upper and lower frames (12).

In order to be able to weigh goods, make sure that the 4 screws are mounted at each corner with a gap of approx. 3 … 5 mm between the lower and upper frames.

Remember that these screws are a mechanical overload protection device and should not be unscrewed too far.

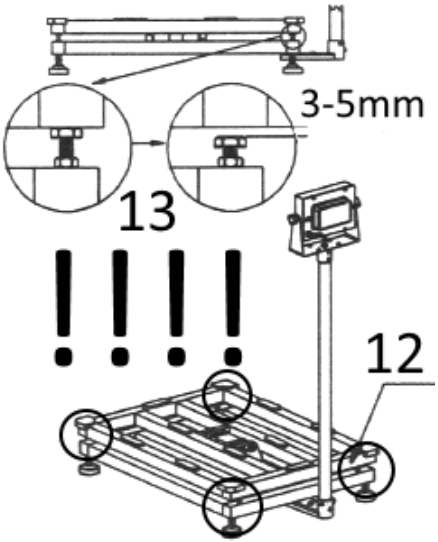

Finally, the balance must be aligned horizontally. To do this, turn the adjustable feet (14) of the weighing platform until the level indicator (15) shows a level position and the balance stands stably.

Then place the weighing surface (8) on the frame and start weighing.

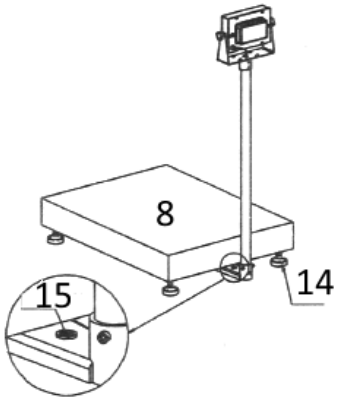

After setting up the platform scales, check the gravitational range of the place of installation in the scales. You will find this function in the internal menu under "C37.

To find out what the gravitational range is at your place of installation, contact your local weights and measures office.

5 Key description

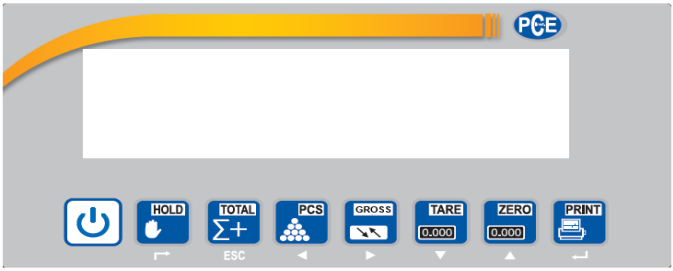

	"ON / OFF" By pressing the "ON / OFF" key, the scales can be switched ON. Pressing the "ON / OFF" key for a longer period of time switches off the scales.
	"HOLD" With the "HOLD" key, the weight shown in the display can be frozen. By repeatedly pressing the "HOLD" key, the display switches to normal weighing mode. This function is used to record the value even if the sample is no longer on the scales, e. g. to enter it in the documents.
	"TOTAL" With the "TOTAL" key, the weight can be totalized (+). This key can also be used to display the total weight (TOTAL). In menu mode, the key is used to exit a function (ESC).
	"PCS" (piece counting function) With the "PCS" key, you can count articles of equal weight by determining the weight. In menu mode, the key is used to move to the left (←).
	"GW / NW" With the "GW / NW" key, you can view the "GROSS / NET" weight. This weight is the weight considering the TARE mass. In menu mode, the key is used to move to the right (→).

	"TARE" Press the "TARE" key to tare the displayed weight. In menu mode, the key is used to decrease a value (↓).
	"ZERO" Use the "ZERO" function to zero the weight in the display. In contrast to TARE, this is not taken into account for the GROSS / NET weight. In menu mode, the key is used to increase a value (↑).
	"PRINT" With the "PRINT" key, the data can be sent to a printer or PC via the RS-232 interface. In menu mode, the key serves as a confirmation key (↵ "ENTER").

6 Commissioning

6.1.1 Switching on and off

1. Switch on the balance:

Press and hold the key until the balance switches on. The display will then perform a self-test and then go into normal weighing mode. As soon as the stability symbol (see picture) appears in the display, you can start weighing.

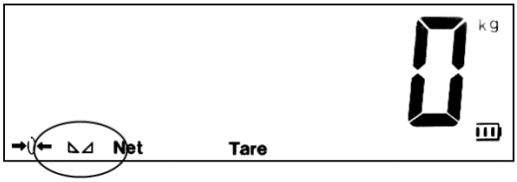

If the balance does not respond, check the power supply to the display. If the stability symbol does not appear, check the base and level the balance.

2. Turn it off:

Press and hold the key until the scale turns off.

6.1.2 "ZERO“

When the balance is switched on, the initial weight should always be ZERO in order to obtain correct measurement results. For this purpose, the balance automatically filters out any loads so that 0 kg is always shown in the display when the balance is started.

If there is no zero in the display, the

"**ZERO**" key must be used to zero the display. This zeroed value is not taken into account in the gross / net evaluation.

If the zero function is active, →0← appears at the bottom left side of the display.

If you wish to have the existing weight displayed after starting the scales, as is useful for weighing containers, for example, some items must be changed in menu mode (see menus C07 / C08 / C09 and C05 to determine the internal zero point).

6.1.3 "TARE"

This function enables the determination of the GROSS / NET weight. This means that the scale is able to take the weight of the pallet into account.

To do this, place the empty pallet on the scales and press the

"TARE" key.
If a tare weight is entered, the display shows “Tare”.

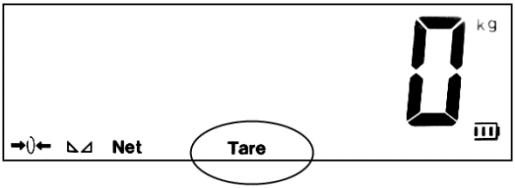

ATTENTION: The weighing range is not increased by taring, so if you have a 30 kg scale and tare 10 kg, you only have a weighing range of 20 kg left.

6.1.4 "GROSS"

When the "TARE" function is used, the weight can be shown in the display as NET or GREAT weight, i. e. the weight with or without the pallet.

To do this, simply press the "**GROSS**" key and the display will show the corresponding weight with the additional information whether it is the NET or the GROSS weight. The gross weight appears for a short time and then automatically returns to the net weight.

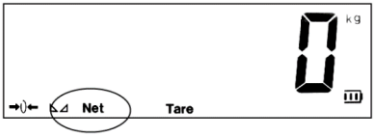

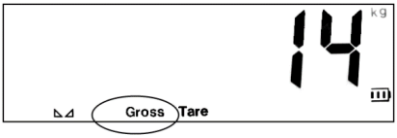

NET GROSS

6.1.5 "TOTAL"

This function allows adding several weights. It is useful for monitoring the loading of vehicles, for example. Just press the "**TOTAL**" key when the balance has calculated the weight. After pressing the "**TOTAL**" key, the display shows "n 001".

This means that a weighing has been saved to the totalizing memory. Each time the "**TOTAL**" key is pressed, the value increases. If the function is active, the message →Total← appears in the lower part of the display.

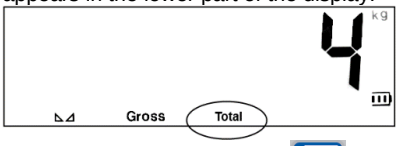

In order to check the total, the "**PRINT**" and "**TOTAL**" keys must be pressed simultaneously. The display will then briefly show the number of saved values, e. g. "n008" = 8 values, and then the total sum.

To exit this indication and enter normal weighing mode, press and hold the "**TOTAL**" key until →CLr n← appears in the display. Here, it is possible to clear the totalizing memory by using the "**ZERO**" key to change →CLr n← (Clear No) to →CLr Y← (Clear Yes) and confirm with the "**PRINT**" key. Exit the function via →CLr n← (Delete No); then you can continue with the totalizing function.

6.1.6 "COUNT“

This function enables you to count parts of equal weight. To do this, a unit weight must first be entered, which is then divided by the total weight. The piece weight is saved by a reference weighing. This means that some of the parts to be counted must first be placed on the scale and the number of reference parts on the scale must be confirmed.

Press the "**COUNT**" key on the scale display. The display will now show →PCS 0←. By pressing the "**ZERO**" key, the number of reference parts can now be changed. 5 / 10 / 20 / 50 / 100 / 200 and 500 are available for selection. (The higher the number of reference parts, the better the mean value for the piece count and thus the later count). Now the number of previously selected reference parts must be placed on the scale and confirmed with the "**PRINT**" key. The display then shows the number of pieces and the piece counting unit →PCS←.

By pressing the "**COUNT**" key repeatedly, the display returns to normal weighing mode and the unit changes from →PCS← to →kg←. You can now always use this key to switch between the two functions. The unit weight is deleted when the balance is switched off.

If a new piece weight is to be determined, press the "**COUNT**" key and the "**PRINT**" key simultaneously. This will take you back to the position where you can select the reference quantity 5 / 10 / 20 / 50 / 100 / 200 or 500.

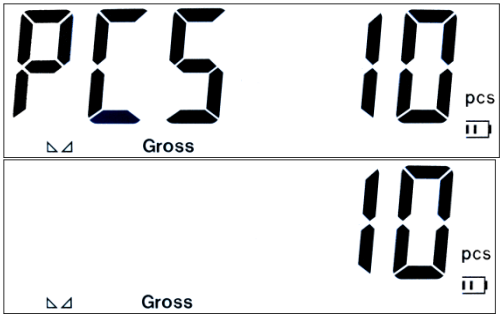

7 Menu

The platform scale offers a variety of other adjustment and function options via the internal menu. Here, for example, the settings for container weighing / animal weighing / weight monitoring / interface communication etc. can be set. However, please bear in mind that incorrect basic settings such as incorrect adjustment of the scale can lead to incorrect measurements of the scale. The settings depend on the use of the platform scales and may differ considerably from the standard settings.

To access the internal menu, press the

"HOLD" key and the

"PRINT" key simultaneously. The display will then show →C 01←.

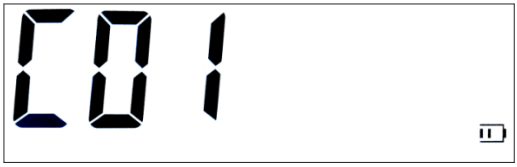

"ZERO" and

"TARE" keys change the number.

"COUNT" and

"GROSS" keys change the position.

"PRINT" key confirms the entry or enters the function.

"TOTAL" key exits the function.

The following table lists the functions and setting options that are indicated by the numeric code. You can select these individual functions with the keys listed above and adapt them to your requirements.

To exit the menu, use the

key to make sure that the scale accepts the settings. If you exit the menu with the ON/OFF key, the settings are not accepted.

Menu item	Setting options	Procedure
C 01 **Calibration weight unit selection**	No possibility because "kg" is fixed C 1 1 = kg C 1 2 = lb	To change the displayed measuring unit, parameterize "C40".
C 02 **Decimal place setting**	C 2 0 = none C 2 1 = one digit [0.0] C 2 2 = two digits [0.00] C 2 3 = three digits [0.000] C 2 4 = four digits [0.0000]	Enter the function "C 02" with the "**PRINT**" key. Select the setting with the "**ZERO**" ↑ and "**TARE**" ↓ keys. Confirm with "**PRINT**" key.
C 03 **Setting the resolution steps [d]**	C 3 1 = steps of one [0.01] C 3 2 = steps of two [0.02] C 3 5 = steps of five [0.05] C 3 10 = steps of ten [0.10] C 3 20 = steps of twenty [0.20] C 3 50 = steps of fifty [0.50]	Enter the function "C 03" with the "**PRINT**" key. Select the setting with the "**ZERO**" ↑ and "**TARE**" ↓ keys. Confirm with "**PRINT**" key.
C 04 **Weighing range setting [MAX]**	Here you can enter the number that corresponds to the MAX load of the scales, e. g. 150.00 (The entry is in kg, see C 01)	Enter the function "C 04" with the "**PRINT**" key. Set the number with the "**ZERO**"

		↑ and **"TARE"** ↓ keys and the **"COUNT"** ← and **"GROSS"** → keys. Confirm with **"PRINT"** key ---------- Return to normal weighing mode using the **"TOTAL"** key
C 05 **Zero point setting**	The zero point is the point at which the balance should display 0 kg. This is useful if the balance has been modified, e. g. by an additional construction. If the display shows the error message "nnnnnnnnn", the zero point is shifted and should be readjusted as described on the right. C 5 0 = no adjustment C 5 1 = setting the zero point for the following calibration C 5 2 = adjusting the zero point without having to recalibrate the balance	Enter the function "C 05" with the **"PRINT"** key. Depending on the purpose of the zero point, the platform must be empty or fitted with the construction. Select the function (0/1/2) with **"ZERO"** ↑ and **"TARE"** ↓. Confirm with **"PRINT"** key (the display shows “CAL 9” and the countdown starts) When the display shows "0" again, confirm with the **"PRINT"** key. The display then shows the next menu item "C 06" **----------** Return to normal weighing mode by pressing the **"TOTAL"** key.

C 06 **Calibrating the scales**	If the balance displays deviating weights, a new calibration/adjustment may be helpful. However, you should always carry out zero adjustment "C 05" before you perform this adjustment. C 6 0 = no adjustment C 6 1 = single point adjustment (adjustment with only one weight) C 6 2 = multipoint adjustment (adjustment with up to 7 weights) C 6 3 = ********** Before adjusting the balance, make sure that it is level on a solid surface and that the cells and platform are free. (transport lock, etc.) Then the weights should be prepared for the adjustment - we recommend at least 2/3 of the total load as adjustment weight. Multipoint adjustment is the best way to achieve the highest possible accuracy of the balance. If the balance changes location frequently, the gravity settings under "C36" and "C37" should be observed.	Enter the function "C 06" with the "**PRINT**" key. Select the function (0/1/2/3) with "**ZERO**" ↑ and "**TARE**" ↓. Confirm with the "**PRINT**" key ---------- "C6 1" Single point adjustment The display shows "SPAn" and then "000150". Here you must set the calibration weight that will be used. Then place the weight on the scales and press "**PRINT**". The display will then show “CAL 9” and the countdown will begin. Then the display will show "CAL End" and this must be confirmed with the "**PRINT**" key. ---------- "C6 2" Multipoint adjustment The display briefly shows "SPAn" and then "LnE 2". Here you can enter the number of

		weights used for multi-point adjustment. Set the number with "**ZERO**" ↑ and "**TARE**" ↓. Confirm with "**PRINT**" key. The display shows "bdno 01" and then "001000". Here the weight of the first adjustment point must be set, then put the weight on the scale and press the "**PRINT**" key. (The display shows “CAL 9” and the countdown starts) Then "bdno 02" appears and the procedure is as described above ("bdno 01" until the number of pre-set adjustment points is reached.) Then "CAL End" appears in the display and this must be confirmed with the "**PRINT**" key. ---------- Return to normal weighing mode by pressing the "**TOTAL**" key.

C 07 **Factory settings**	Here you can reset the scale settings to the factory defaults. C 7 0 = Exit menu C 7 1 = Reset settings	Enter the function "C 07" with the "**PRINT**" key. Select the function (0/1) with "**ZERO**" ↑ and "**TARE**" ↓. Confirm with the "**PRINT**" key. ---------- Return to normal weighing mode by pressing the "**TOTAL**" key.
C 08 **Warning tone**	Here you can switch the beep tone of the scales ON or OFF. C 8 0 = without warning tone / mute C 8 1 = with warning tone	Enter the function "C 08" with the "**PRINT**" key. Select the function (0/1) with "**ZERO**" ↑ and "**TARE**" ↓. Confirm with the "**PRINT**" key. ---------- Return to normal weighing mode by pressing the "**TOTAL**" key.
C 09 **Automatic power-off of the balance**	Here you can set the automatic power-off of the balance. If the balance is not used within the set time period, it will switch off automatically to save the battery. C 9 0 = deactivate power-off. C 9 10 = switch-off after 10 min C 9 30 = Switch-off after 30 min C 9 60 = Switch-off after 60 min	Enter the function "C 09" with the "**PRINT**" key. Select the function (0/10/30/60) with "**ZERO**" ↑ and "**TARE**" ↓. Confirm with the "**PRINT**" key. ---------- Return to normal weighing

		mode by pressing the "**TOTAL**" key.
C10 **Display backlight**	Here you can set when you want to use the backlight of the display. C 10 0 = deactivate backlight C 10 1 = 10 min backlight C 10 2 = permanently ON	Enter the function "C 10" with the "**PRINT**" key. Select the function (0/1/2) with "**ZERO**" ↑ and "**TARE**" ↓. Confirm with the "**PRINT**" key. ---------- Return to normal weighing mode by pressing the "**TOTAL**" key.
C11 **Weight value hold function**	Here you can set which value or when the weight should be held in the display. C 11 0 = deactivate hold function C 11 1 = PEAK / MAX value (highest measured value is displayed) C 11 2 = by keystroke (value held when "HOLD" is pressed) C 11 3 = automatic (when weight is stable, value is automatically held, even if weight is removed from scales) C 11 4 = animal weighing function (an average value from several measurements is displayed to filter out the movements of the animal)	Enter the function "C 11" with the "**PRINT**" key. Select the function (0/1/2/3/4) with "**ZERO**" ↑ and "**TARE**" ↓. Confirm with the "**PRINT**" key. ---------- Return to normal weighing mode by pressing the "**TOTAL**" key.
C12 **Animal filter function**	Here you can set the filter time for animal weighing (C11 4). C 12 3 = Average value from the measurements of the last 3 seconds C 12 5 = Average value from the measurements of the last 5 seconds.	Enter function "C 12" with the "**PRINT**" key. Select the function (3/5) with "**ZERO**" ↑ and "**TARE**" ↓.

		Confirm with the "**PRINT**" key. ---------- Return to normal weighing mode by pressing the "**TOTAL**" key.
C13 **Upper (HI / MAX) alarm limit**	Here you can set the upper alarm limit to classify the weight: MIN / OK / MAX (Lo / OK / Hi) If the set value is exceeded, the display shows "Hi". With optional switching outputs, this is also the upper switching limit. If the weight is in the "Lo" or "Hi" range, a continuous warning tone sounds from the display when the function "C 08" is active. Above the Lo and below the Hi limit, the display shows "OK" and the balance does not emit a warning tone.	Enter function "C 13" with the "**PRINT**" key. Display shows e. g. "000000". The upper weight limit (Hi) must be entered here. Confirm with the "**PRINT**" key. ---------- Return to normal weighing mode by pressing the "**TOTAL**" key.
C14 **Lower (Lo / MIN) alarm limit**	Here the lower alarm limit can be set to classify the weight: MIN / OK / MAX (Lo / OK / Hi) If the value falls below the set value, the display shows "Lo". With optional switching outputs, this is also the lower switching limit. If the weight is in the "Lo" or "Hi" range, a continuous warning tone sounds from the display when the function "C 08" is active. Above the Lo and below the Hi limit, the display shows "OK" and the balance does not emit a warning tone.	Enter function "C 14" with the "**PRINT**" key. Display shows e. g. "000000". The lower weight limit (Lo) must be entered here. Confirm with the "**PRINT**" key. ---------- Return to normal weighing mode by pressing the "**TOTAL**" key.
C15 **AD converter display**	This value is the analogue value coming from the cell and is used by the AD converter to perform the conversion to a weight. This value can be used to check in what range the cells of the scales work.	Enter function "C 15" with the "**PRINT**" key. *Nothing can be changed in this*

		function. This function is only for information and evaluation of the balance status. Exit this function by pressing the "**PRINT**" or "**TOTAL"** key.
C16 **Date setting**	The balance has an internal clock. This enables time and date information including the weight value to be printed by a directly connected printer.	Enter function "C 16" with the "**PRINT**" key. Display shows e.g. "14.01.03". The format to be set is Year / Month / Day. Confirm with the "**PRINT**" key.
C17 **Time setting**	The balance has an internal clock. This enables time and date information including the weight value to be printed by a directly connected printer.	Enter the function "C 17" with the "**PRINT**" key. Display shows e.g. "19.07.22". The format to be set is hours / minutes / seconds. Confirm with the "**PRINT**" key.
C18 **Data transfer setting**	Here you can set when the weighing data should be sent via the interface of the scales. C 18 0 = interface deactivated C 18 1 = continuous data transfer in large display format *0 000127891328 (127 kg) C 18 2 = data transfer by keystroke in printer format	Enter the function "C 18" with the "**PRINT**" key. Select the function (0/1/2/3/4) with "**ZERO**" ↑ and "**TARE**" ↓. Confirm with the "**PRINT**" key. ----------

	Date: 14.01.03 Time: 12:47:36 Gross 125kg C 18 3 = data request by PC commands, see interface description. C 18 4 = continuous data transfer ST,GS,+ 112kg ST,GS,+ 112kg ST,GS,+ 112kg ST,GS,+ 112kg	Return to normal weighing mode by pressing the "**TOTAL**" key. When connecting the balance to the PC, the pin assignment of the interface must correspond to the description in chapter 8 so that data can be exchanged.
C19 **Setting the baud rate**	Here you can set the transmission rate of the balance. This must be adapted to the interface of the receiving device so that the weighing data can be displayed correctly. C 19 0 = 1200 baud rate C 19 1 = 2400 baud rate C 19 2 = 4800 baud rate C 19 3 = 9600 baud rate	Enter the function "C 19" with the "**PRINT**" key. Select the function (0/1//2/3) with "**ZERO**" ↑ and "**TARE**" ↓. Confirm with the "**PRINT**" key. ---------- Return to normal weighing mode by pressing the "**TOTAL**" key.
C20 **ZERO key range**	Here you can set the ZERO range within which zeroing can be performed with the "**ZERO**" key on the display. ZERO is not the same as TARE because unlike TARE, ZERO is not taken into account in the gross / net calculation. The setting is in % of MAX. C 20 00 = "**ZERO**" key deactivated C 20 01 = 1 % can be zeroed C 20 02 = up to 2 % C 20 04 = up to 4 % C 20 10 = up to 10 % C 20 20 = up to 20 % C 20 100 = up to 100 %	Enter the function "C 20" with the "**PRINT**" key. Select the function with "**ZERO**" ↑ and "**TARE**" ↓. Confirm with the "**PRINT**" key. ---------- Return to normal weighing

		mode by pressing the "**TOTAL**" key.
C21 **Setting start / Auto ZERO function**	When starting the scales, the weight on the scales is zeroed. Here you can set the zeroing range and deactivate zeroing. C 21 00 = no AUTO zeroing C 21 01 = up to 1 % is zeroed C 21 02 = up to 2 % C 21 05 = up to 5 % C 21 10 = up to 10 % C 21 20 = up to 20 % C 21 100 = up to 100 %	Enter the function "C 21" with the "**PRINT**" key. Select the function with "**ZERO**" ↑ and "**TARE**" ↓. Confirm with the "**PRINT**" key. ---------- Return to normal weighing mode by pressing the "**TOTAL**" key. ********** Deactivating zeroing makes special sense for e. g. container weighing but should be done in combination with a new zero point "C 05" (empty weight) to weigh only the container contents.
C22 **Setting automatic zero tracking**	Since the weight shown in the display is based on a conversion of a signal coming from the cell, signal fluctuations may occur. This function allows you to set the range of fluctuations that the display should compensate for. This results in a stable weight indication on the display. d = resolution steps C 22 0.5 = compensation up to ±0.5d C 22 1.0 = compensation up to ±1.0d C 22 2.0 = compensation up to ±2.0d C 22 3.0 = compensation up to ±3.0d C 22 4.0 = compensation up to ±4.0d C 22 5.0 = compensation up to ±5.0d	Enter the function "C 22" with the "**PRINT**" key. Select the function with "**ZERO**" ↑ and "**TARE**" ↓. Confirm with the "**PRINT**" key. ---------- Return to normal weighing mode by pressing the

		"**TOTAL**" key. ********** The automatic zero tracking cannot be greater than "C21".
C23 **Setting automatic zero tracking time**	Here you can set the response time of automatic zero tracking. C 23 0 = no tracking time C 23 1 = 1 second C 23 2 = 2 seconds C 23 3 = 3 seconds	Enter the function "C 23" with the "**PRINT**" key. Select the function with "**ZERO**" ↑ and "**TARE**" ↓. Confirm with the "**PRINT**" key. ---------- Return to normal weighing mode by pressing the "**TOTAL**" key.
C24 **Setting the error limit for overload "uuuuuu"**	Here you can set how many resolution steps above the maximum load are necessary to display the error message for overload "uuuuuuu". The error message protects the user and helps to comply with certain regulations.	Enter the function "C 24" with the "**PRINT**" key. Display shows "C 24 09" = 09 d = 9 resolution steps. A value of up to 99 can be set here. Select the function with "**ZERO**" ↑ and "**TARE**" ↓. Confirm with the "**PRINT**" key. ---------- Return to normal weighing mode by pressing the "**TOTAL**" key.

C25 **Setting the error limit for underload "nnnnnn"**	Here you can set what percentage of the maximum load can be displayed in the negative range of the scales before the error message "nnnnnn" appears in the display. C25 0 = - 20d (resolution steps) C25 10 = 10 % of the maximum load C25 20 = 20 % of the maximum load C25 50 = 50 % of the maximum load C25 100 = 100 % of the maximum load	Enter the function "C 25" with the "**PRINT**" key. Select the function with "**ZERO**" ↑ and "**TARE**" ↓. Confirm with the "**PRINT**" key. ---------- Return to normal weighing mode by pressing the "**TOTAL**" key.
C26 **Setting the stabilisation speed**	Here you can set the response time of the stabilisation indicator " ◺◿ ", i. e. whether the indication should appear quickly, medium or slowly. C26 0 = fast C26 1 = medium C26 3 = slow The adjustment of the stabilisation time can be useful for different weighing goods in connection with automatic data transfer at stable value.	Enter the function "C 26" with the "**PRINT**" key. Select the function with "**ZERO**" ↑ and "**TARE**" ↓. Confirm with the "**PRINT**" key. ---------- Return to normal weighing mode by pressing the "**TOTAL**" key.
C27 **Setting the stabilisation range**	The reaction steps of the stabilisation display " ◺◿ " can be set here. C27 1 = 1d (1 resolution step) C27 2 = 2d (2 resolution steps) C27 5 = 5d (5 resolution steps) C27 10 = 10d (10 steps)	Enter the function "C 27" with the "**PRINT**" key. Select the function with "**ZERO**" ↑ and "**TARE**" ↓. Confirm with the "**PRINT**" key. ---------- Return to normal weighing mode by

		pressing the "**TOTAL**" key.
C28 **Dynamic filter setting**	This is a filter that filters the movements on the scales before the value appears on the display. C28 1 = 1 filter strength C28 2 = 2 filter strengths C28 3 = 3 filter strengths C28 4 = 4 filter strengths C28 5 = 5 filter strengths C28 6 = 6 filter strengths The greater the filter strength, the slower the display reacts to weight changes / fluctuations.	Enter the function "C 28" with the "**PRINT**" key. Select the function with "**ZERO**" ↑ and "**TARE**" ↓. Confirm with the "**PRINT**" key. ---------- Return to normal weighing mode by pressing the "**TOTAL**" key.
C29 **Noise filter setting**	Here you can set filters to suppress the noise of the signal. C29 1 = 1 filter strength C29 2 = 2 filter strengths C29 3 = 3 filter strengths	Enter the function "C 29" with the "**PRINT**" key. Select the function with "**ZERO**" ↑ and "**TARE**" ↓. Confirm with the "**PRINT**" key. ---------- Return to normal weighing mode by pressing the "**TOTAL**" key.
C31 ** (OPTION) **Analogue output signal setting**	Here you can set the analogue signal that is most suitable for controlling your devices. C31 0 = 0 - 20 mA C31 1 = 4 - 20 mA	Enter the function "C 31" with the "**PRINT**" key. Select the function with "**ZERO**" ↑ and "**TARE**" ↓. Confirm with the "**PRINT**" key. ----------

		Return to normal weighing mode by pressing the "**TOTAL**" key.
C32 ** (OPTION) Parameterisation of the analogue interface	The standard signal can be parameterized here. C32 oUt 4 = for MAX 4 mA C32 oUt 5 = for MAX 5 mA C32 oUt 6 = for MAX 6 mA C32 oUt ... = …. C32 oUt ... = …. C32 oUt 20 = at MAX 20 mA *A very high-resolution multimeter is necessary for this!!!*	Enter the function "C 32" with the "**PRINT**" key. Select the function with "**ZERO**" ↑ and "**TARE**" ↓. Confirm with the "**PRINT**" key. ---------- Return to normal weighing mode by pressing the "**TOTAL**" key.
C33 ** (OPTION) Relay output setting	C33 0 = relay output deactivated C33 1 = relay output mode 1 continuous signal C33 2 = relay output mode 2 pulse signal C33 3 = without function	Enter the function "C 33" with the "**PRINT**" key. Select the function with "**ZERO**" ↑ and "**TARE**" ↓. Confirm with the "**PRINT**" key. ---------- Return to normal weighing mode by pressing the "**TOTAL**" key.
C34 ** (OPTION) Setting the communication address (no function)	C 34 .. = 0 … 99	Enter the function "C 34" with the "**PRINT**" key. Select the function with "**ZERO**" ↑ and "**TARE**" ↓.

		Confirm with the "**PRINT**" key. ---------- Return to normal weighing mode by pressing the "**TOTAL**" key.
C35 ** (OPTION) Setting the wireless communication address **(no function)**	C 35 .. = 0 … 99	Enter the function "C 35" with the "**PRINT**" key. Select the function with "**ZERO**" ↑ and "**TARE**" ↓. Confirm with the "**PRINT**" key. ---------- Return to normal weighing mode by pressing the "**TOTAL**" key.
C36 **Gravity setting for adjustment**	Here you can set the gravity / gravitational acceleration. This is a conversion factor for the correct determination of the weight. C 36 = 09.7936 m/s²	Enter the function "C 36" with the "**PRINT**" key. Select the function with "**ZERO**" ↑ and "**TARE**" ↓. Confirm with the "**PRINT**" key. ---------- Return to normal weighing mode by pressing the "**TOTAL**" key.
C37 **Setting gravity of the place of installation**	C 37 = 09.7936 m/s²	Enter the function "C 37" with the "**PRINT**" key. Select the function with

		"**ZERO**" ↑ and "**TARE**" ↓. Confirm with the "**PRINT**" key. ---------- Return to normal weighing mode by pressing the "**TOTAL**" key.
C38 **Info display version**	13.06.28 PCoO21 PC-41A	Enter function "C 38" with the "**PRINT**" key. The display then runs through automatically.
C39 **Dual range weighing**	C39 0 = Function disabled C39 1 = Function activated	If the function is to be activated, first set the resolution in C03 and the maximum weight under C04 for Max 2. Only then activate the function "C39 1" and set the parameters under C03 and C04 for resolution 1 & Max 1.
C40 **Conversion factor**	C40 1 = kg C40 2 = lb C40 3 = free conversion factor Under "C40 3", a conversion value for one kg must be entered and confirmed with the "**PRINT**" key. Example: entry 0.495 If there is something on the scale that weighs 1 kg, the scale shows 0.495; if there are 5 kg on the scale, the scale shows 2.475, etc.	Enter the function "C 40" with the "**PRINT**" key. Select the function with "**ZERO**" ↑ and "**TARE**" ↓. Confirm with the "**PRINT**" key. ---------- Return to normal weighing mode by

		pressing the "**TOTAL**" key.
C41 **Printing information**	C41 0 = Print weight and quantity Date: 16.07.08 Time: 14:46:42 Net 25.11kg Tare 1.19kg Gross 26.31kg When the quantity is shown on the display: Date: 16.07.08 Time: 14:58:39 pieces 10pcs Net 25.11kg Tare 1.19kg Gross 26.30kg C41 1 = Print weight Date: 16.07.08 Time: 14:53:16 Gross 26.31kg C41 2 = Print quantity Date: 16.07.08 Time: 14:56:13 pieces 10pcs	Enter function "C 41" with the "**PRINT**" key. Select the function with "**ZERO**" ↑ and "**TARE**" ↓. Confirm with the "**PRINT**" key. ---------- Return to normal weighing mode by pressing the "**TOTAL**" key.

8 Connection options

Power supply

Battery = lead battery 6 V / 4 Ah / approx. 101 x 45 x 70 mm
or mains adaptor: 9 V / 1.2 A / outside (-) / inside (+)

Battery operation is not possible for displays / scales with analogue output or potential-free contacts. The power supply is then provided by a 12 V / 1.2 A / external (-) / internal (+) mains adaptor.

Cell connection

The display can be connected with up to 6 cells (4 or 6-wired) of a maximum of 350Ω.

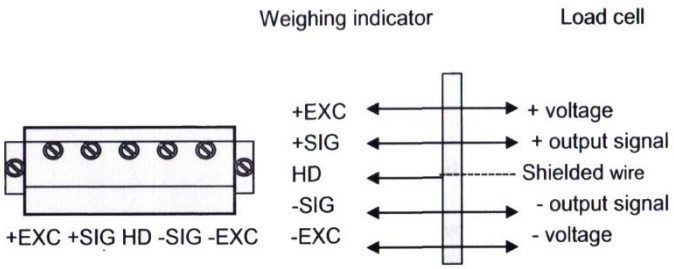

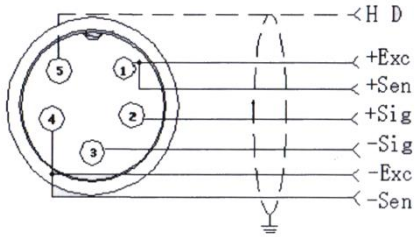

+Exc = red cable

+Sig = green Cable

Shie = black cable (with shrinking tube and small lettering)

-Sig = white cable

-Exc = black cable

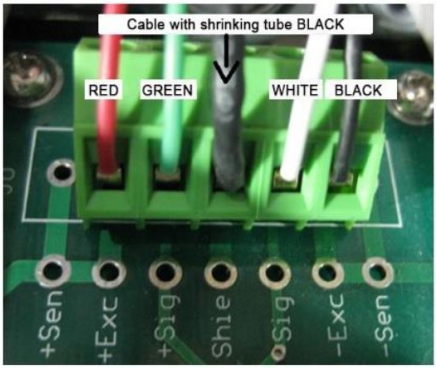

RS 232 interface / D-SUB 9 female

You can connect the balance to various external devices via the RS-232 interface.

ATTENTION:
Observe the pin assignment of the connection cable and the interface parameters.

connection:

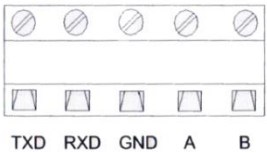

Pin definitions:

Pins	Definitions	Function
RS232	TXD	Sending data
	RXD	Receiving data
	GND	Ground
RS485	A	RS485 output "A"port
	B	RS485 output"B"port

DB9 definition

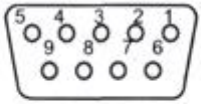

Pin function and definition as bellows:

DB9 joint	Definition	Function
2	TXD	Sending data
3	RXD	Receiving data
5	GND	Ground interface

If the PC in use does not have an RS-232 interface, you can use a USB converter to establish a direct connection between the balance and the PC (without an intermediate cable).

The platform scale has a bidirectional RS-232 interface. This means that you can use query commands to control the scale via this interface. For example, you can use a PC software to query the weighing result from the scales for and process it as intended by your software.

Command	Definition	Function
T	TARE	Tares the weight
Z	ZERO	Zeroes the weight
P	Print	Queries the weight
G	Change gross/net weight	Switches between the gross / net weight display
R	Repeat command	Repeats the last command
C	kg / lb	Toggles between the weight units kg / lb

R command receive data format

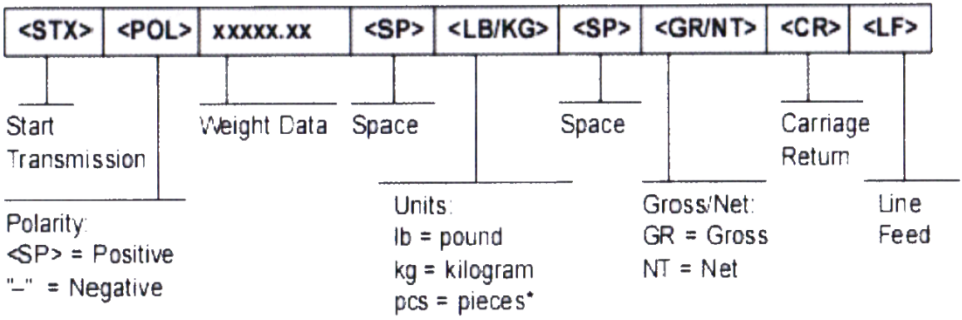

Depending on the setting of the transmission format, the data look as follows:

Tare mode:

Date:	XX.XX. XX
Time:	XX：XX：XX
NET	XX.X kg
TARE	XX.X kg
GROSS	XXX.X kg

Gross mode:

Date:	XX.XX. XX
Time:	XX：XX：XX
GROSS	XXX.X kg

PC or Big display continuous sending format

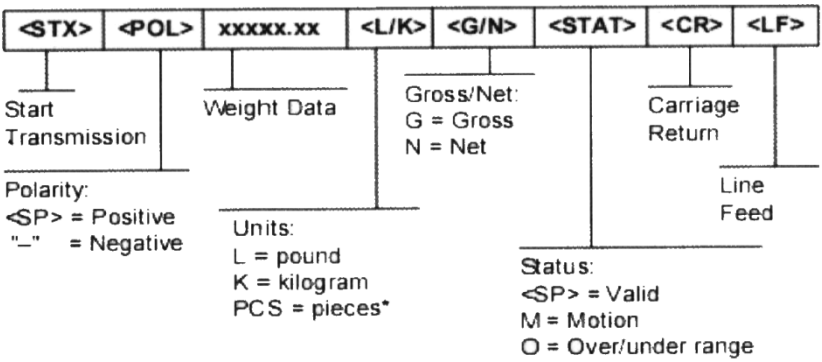

Big display continuous sending format

Output continuous format																	
STX	SWA	SWB	SWC	X	X	X	X	X	X	X	X	X	X	X	X	CR	CKS
1	2			3						4						5	6

State A			
Bits0,1,2			
0	1	2	Decimal point position
0	1	0	XXXXXXX
1	1	0	XXXXX. X
0	0	1	XXXX. XX
1	0	1	XXX. XXX
Bits3,4			Division
0	1		X1
1	0		X2

State B	
BitsS	function
Bits0	gross=0, net=1
Bits1	Symbol: positive =0,negative =1
Bits2	Overload(or under zero)=1
Bits3	dynamic=1
Bits4	unit：lb=0, kg=1
Bits5	Constant 1
Bits6	Constant 0

State C			
Bit2	Bit1	Bit0	unit
0	0	0	Kg or lb
0	0	1	g
0	1	0	t
Bit 3			printing=1
Bit 4			Extend display=1
Bit 5			Constant 1
Bit 6			Constant 0

Computer continuous sending format

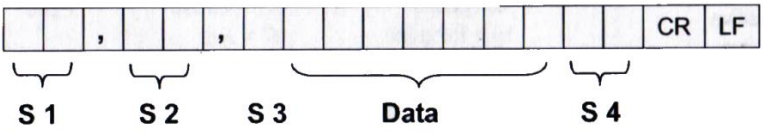

S1: weight status, ST= standstill, US= not standstill, OL= overload

S2: weight mode, GS=gross mode, NT=net mode

S3: weight of positive and negative, "+" or " –"

S4: "kg" or "lb"

Data: weight value, including decimal point

CR: carriage return

LF: line feed

Connecting the balance to a PC

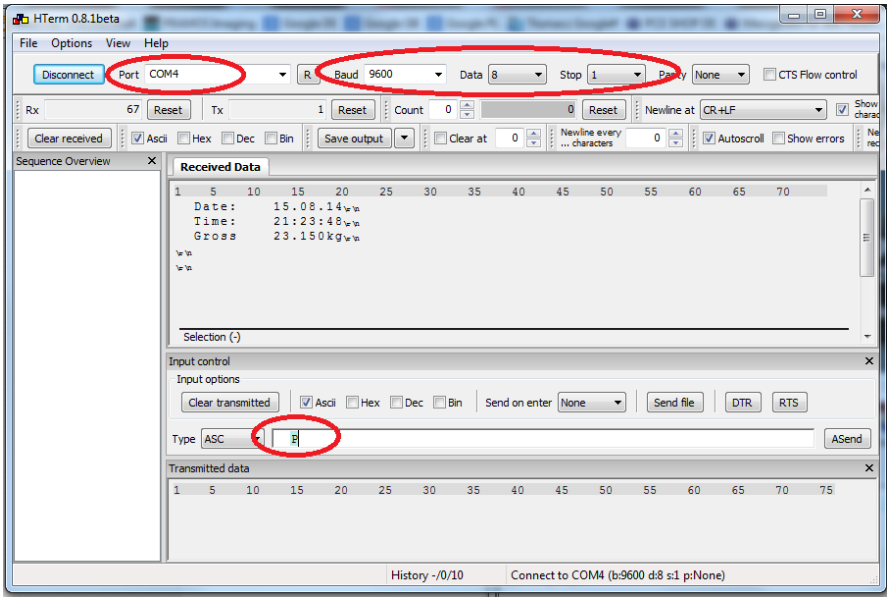

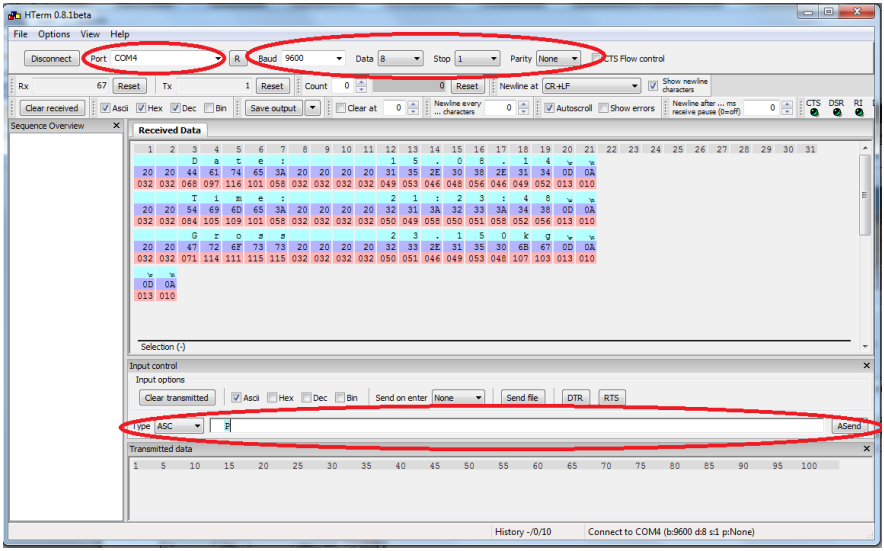

Description of analogue interface
4-20 mA has a resolution of 1 / 1000 and 100 ... 350 Ω.

The display is equipped with a 7-pin male connector via which both the RS-232 interface and the analogue output are led out.

Pin number	Function	Assignment	Figure
PIN 1	TXD	RS-232 interface	
PIN 2	RXD		
PIN 3	GND		
PIN 4	+	4-20 mA analogue output	
PIN 5	GND		
PIN 6	not assigned		
PIN 7			

Description Switching output / limit value function

Potential-free contacts possible with JZC-49FA 005-1H1(555) relay pulse signal and continuous signal

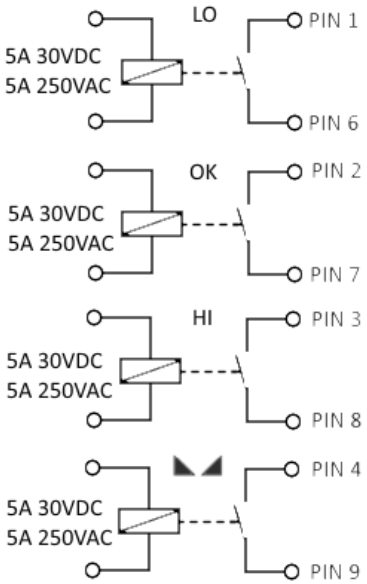

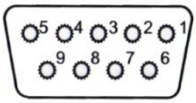

DB9 pin	definition	port
1 pin	1st output signal pin	Out1
6pin	1st output signal pin	Out1
2 pin	2nd output signal pin	Out2
7pin	2nd output signal pin	Out2
3 pin	3rd output signal pin	Out3
8 pin	3rd output signal pin	Out3
4 pin	4th output signal pin	Out4
9 pin	4th output signal pin	Out4

Inner connection pin definitions

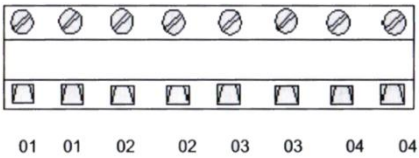

9 Connecting the balance to the PCE-BP1 printer

First check the settings of the printer. Please lift the cover of the printer and remove the paper roll. Below the paper roll, there are toggle switches which must be set to ON/OFF as follows (see picture). After the settings have been made, the printer must be restarted so that the settings are applied.

BAUD 9600

1 = OFF
2 = OFF
3 = ON
4 = OFF
5 = OFF
6 = OFF
7 = OFF
8 = OFF

Then connect the printer to the display of the balance via the RS-232 interface.
<u>The cable supplied with the printer must be used.</u>

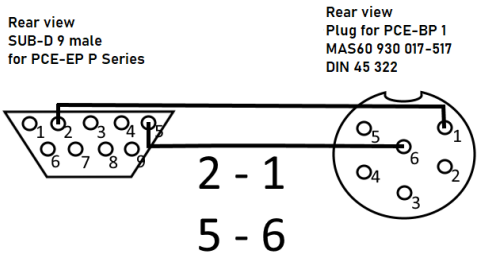

Then the display of the balance checks the settings.

To enter the internal menu, press the

"HOLD" key and the

"PRINT" key simultaneously. The display will then show →C 01←.

The

"ZERO" and

"TARE" keys are used to change the number.

The

"COUNT" and

"GROSS" keys change the position.

The

"PRINT" key confirms the entry or enters the function.

The

"TOTAL" key exits the function.

Now the following menu items have to be set:

C16 Set the correct date
C17 Set the correct time
C18 Set option 2 (data transfer by keystroke)
C19 Set option 3 (baud 9600)

10 Connecting the balance to the USB data logger PCE-USM

The intermediate cable included in the scope of delivery must be used.
Intermediate cable (M & W SUB-D9 2-3 / 3-2 / 5-5)

Then check the settings of the balance.

To enter the internal menu, press the HOLD "HOLD" key and the PRINT "PRINT" key simultaneously. The display will then show →C 01←.

The ZERO "ZERO" and TARE "TARE" keys change the number.

The PCS "COUNT" and GROSS "GROSS" keys change the position.

The PRINT "PRINT" key confirms the entry or enters the function.

The TOTAL ESC "TOTAL" key exits the function.

Now the following menu items have to be set:

C16 Setting the correct date
C17 Setting the correct time
C18 Here you can choose whether you want the PCE-USM data logger to save the weighing data with time and date by pressing a key or by a query at regular time intervals.

For data transfer by keystroke, option 2 is to be set here.
Set option 3 for data transfer per query (query command capital "P")

C19 Set option 3 (baud 9600)

Now the CONFIG.TXT file from the USB pen drive must be adapted. To do this, simply insert the USB pen drive supplied into the PC and open the CONFIG.TXT file.

Especially the marked points have to be considered.

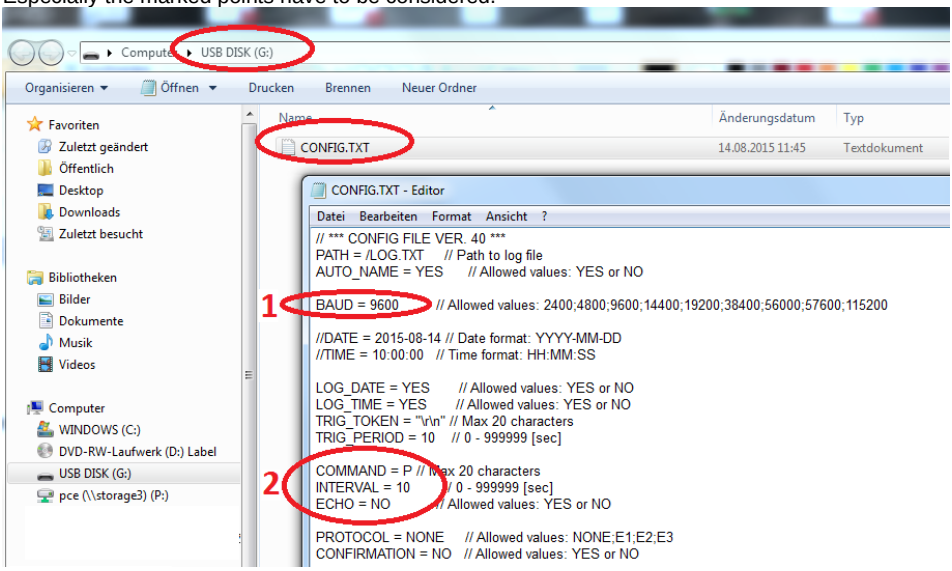

1. You have set the baud rate in the balance to 9600, so the baud rate here must also be 9600. Please adjust if necessary.

2. Depending on the selected data transfer, entries must also be made here.

In **example 1**, data is shown if data transfer by keystroke is selected in the balance.

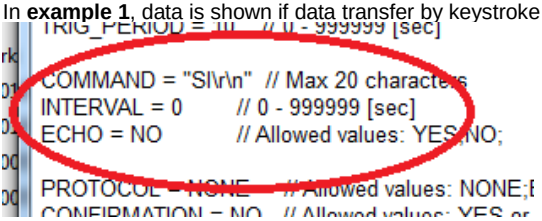

It is important that the query command in "SI" is set and INTERVAL = 0

Example 2 shows data to be set if the balance is to be queried by the PCE-USM. Here, "COMMAND = P" is the request command and "INTERVAL=10" is the time intervals in seconds in which the queries are to be made.

Example 2

```
2   TRIG_PERIOD = 10     // 0 - 999999 [sec]

    COMMAND = P // Max 20 characters
    INTERVAL = 10        // 0 - 999999 [sec]
    ECHO = NO            // Allowed values: YES or NO

    PROTOCOL = NONE      // Allowed values: NONE;E
```

11 Contact

If you have any questions, suggestions or technical problems, please do not hesitate to contact us. You will find the relevant contact information at the end of this user manual.

12 Disposal

For the disposal of batteries in the EU, the 2006/66/EC directive of the European Parliament applies. Due to the contained pollutants, batteries must not be disposed of as household waste. They must be given to collection points designed for that purpose.

In order to comply with the EU directive 2012/19/EU we take our devices back. We either re-use them or give them to a recycling company which disposes of the devices in line with law.

For countries outside the EU, batteries and devices should be disposed of in accordance with your local waste regulations.

If you have any questions, please contact PCE Instruments.

www.pce-instruments.com

PCE Instruments contact information

Germany
PCE Deutschland GmbH
Im Langel 4
D-59872 Meschede
Deutschland
Tel.: +49 (0) 2903 976 99 0
Fax: +49 (0) 2903 976 99 29
info@pce-instruments.com
www.pce-instruments.com/deutsch

France
PCE Instruments France EURL
23, rue de Strasbourg
67250 Soultz-Sous-Forets
France
Téléphone: +33 (0) 972 3537 17
Numéro de fax: +33 (0) 972 3537 18
info@pce-france.fr
www.pce-instruments.com/french

Spain
PCE Ibérica S.L.
Calle Mayor, 53
02500 Tobarra (Albacete)
España
Tel. : +34 967 543 548
Fax: +34 967 543 542
info@pce-iberica.es
www.pce-instruments.com/espanol

United Kingdom
PCE Instruments UK Ltd
Unit 11 Southpoint Business Park
Ensign Way, Southampton
Hampshire
United Kingdom, SO31 4RF
Tel: +44 (0) 2380 98703 0
Fax: +44 (0) 2380 98703 9
info@pce-instruments.co.uk
www.pce-instruments.com/english

Italy
PCE Italia s.r.l.
Via Pesciatina 878 / B-Interno 6
55010 Loc. Gragnano
Capannori (Lucca)
Italia
Telefono: +39 0583 975 114
Fax: +39 0583 974 824
info@pce-italia.it
www.pce-instruments.com/italiano

Turkey
PCE Teknik Cihazları Ltd.Şti.
Halkalı Merkez Mah.
Pehlivan Sok. No.6/C
34303 Küçükçekmece - İstanbul
Türkiye
Tel: 0212 471 11 47
Faks: 0212 705 53 93
info@pce-cihazlari.com.tr
www.pce-instruments.com/turkish

The Netherlands
PCE Brookhuis B.V.
Institutenweg 15
7521 PH Enschede
Nederland
Telefoon: +31 (0)53 737 01 92
info@pcebenelux.nl
www.pce-instruments.com/dutch

China
PCE (Beijing) Technology Co., Limited
1519 Room, 6 Building
Zhong Ang Times Plaza
No. 9 Mentougou Road, Tou Gou District
102300 Beijing, China
Tel: +86 (10) 8893 9660
info@pce-instruments.cn
www.pce-instruments.cn

Hong Kong
PCE Instruments HK Ltd.
Unit J, 21/F., COS Centre
56 Tsun Yip Street
Kwun Tong
Kowloon, Hong Kong
Tel: +852-301-84912
jyi@pce-instruments.com
www.pce-instruments.cn

United States of America
PCE Americas Inc.
711 Commerce Way suite 8
Jupiter / Palm Beach
33458 FL
USA
Tel: +1 (561) 320-9162
Fax: +1 (561) 320-9176
info@pce-americas.com
www.pce-instruments.com/us