PCE Americas Inc.
711 Commerce Way
Suite 8
Jupiter
FL-33458
USA
From outside US: +1
Tel: (561) 320 -9162
Fax: (561) 320 -9176
info@pce-americas.com

PCE Instruments UK Ltd.
Units 12/13
Southpoint Business Park
Ensign way
Hampshire / Southampton
United Kingdom, SO31 4RF
From outside UK: +44
Tel: (0) 2380 98703 0
Fax: (0) 2380 98703 9
info@pce-instruments.com

www.pce-instruments.com/english
www.pce-instruments.com

Manual
Inspection Camera PCE-VE 3xxN Series

Version 2.1
Date of creation: 21.04.2016
Date of last change: 05.09.2017

Contents

1 Safety notes ... 3
2 Specifications ... 4
2.1 Technical specifications ... 4
2.2 Delivery contents ... 5
3 System description ... 5
4 Getting started ... 6
5 Operation ... 6
5.1 Take a picture ... 6
5.2 Record a video ... 6
5.3 View data ... 6
5.4 Settings ... 7
6 HR camera cable (PCE-VE 3xxHR or optional) ... 8
6.1 Safety notes ... 8
6.2 Technical specifications ... 9
6.3 System description ... 10
6.4 Getting started ... 11
6.5 Operation ... 12
7 Articulating camera cable (PCE-VE 350N / HR / N3 / HR3 only or optional) ... 14
7.1 Safety notes ... 14
7.2 System description ... 15
7.3 Getting started ... 15
7.4 Operation ... 16
8 HR camera cable with 360° articulating camera head (PCE-VE 370HR3 or optional) ... 17
8.1 Safety notes ... 17
8.2 Technical specifications ... 17
8.3 System description ... 17
8.4 Getting started ... 17
8.5 Operation ... 19
9 PCE-VE 380N ... 21
9.1 Safety notes ... 21
9.2 Technical specifications ... 21
9.3 System description ... 22
9.4 Getting started ... 23
9.5 Operation ... 25
10 PCE-VE 390N ... 28
10.1 Safety instructions ... 28
10.2 Technical specifications ... 28
10.3 System description ... 29
10.4 Getting started ... 29
11 Disposal ... 31
12 Contact ... 31
12.1 PCE Instruments UK ... 31
12.2 PCE Americas ... 31

Thank you for purchasing a video endoscope from PCE Instruments.

1 Safety notes

Please read this manual carefully and completely before you use the device for the first time. The device may only be used by qualified personnel and repaired by PCE Instruments personnel. There is no warranty of damages or injuries caused by non-observance of the manual.

- This device may only be used in the way specified in this manual. If used otherwise, this may cause dangerous situations.
- Do not expose the device to extreme temperatures, direct sunlight, extreme air humidity or moisture.
- The case should only be opened by qualified personnel of PCE Instruments.
- Do not touch the instrument with wet hands.
- Do not expose the device to shocks or strong vibrations.
- You should not make any technical changes to the device.
- The appliance should only be cleaned with a damp cloth / use only pH-neutral cleaner without solvents or abrasives.
- The device must only be used with original PCE accessories or equivalent.
- Before each use, please inspect the case for damage. In case of any visible damage, please do not use the device.
- The device must not be used be used when the environmental conditions (temperature, air humidity,…) are outside the limit values stated in the specifications.
- Do not expose the instrument to explosive atmospheres.
- Do not use the endoscope near uninsulated current-carrying conductors.
- The instrument should never be placed with the user interface facing an object (e. g. keyboard side on a table).
- This product has been produced for industrial use only. Do not use it for medical or any other biological purposes.

This user's handbook is published by PCE Instruments without any guarantee.
We expressly point to our general guarantee terms which can be found in our general terms of business.
If you have any questions please contact PCE Instruments.

2 Specifications

2.1 Technical specifications

General specifications

Sensor	CMOS
Resolution videos / pictures	640 x 480
Frame rate	30 fps
Lighting	Automatic
White balance	Fixed
Field of view	67 ° PCE-VE 380N / PCE-VE 390N: 150.8 °
Depth of field	1.5 … 10 cm PCE-VE 380N / PCE-VE 390N:10 … mm
Bending radius	90 mm PCE-VE 380N / PCE-VE 390N: Ø 30 cm
Display	3.5 “ (88.9 mm) TFT display
Interface	Mini-USB 1.1 AV out
Memory	8 GB SD card
Compression format	MPEG4
Video format	ASF
Video output system	NTSC / PAL
Picture format	JPEG
Power supply	Rechargeable 3.7 V Li-ion battery
Environmental conditions	0 … +60 °C PCE-VE 350N: -10 … +50 °C PCE-VE 380N: -10 … +60 °C
Weight	450 g (incl. carrying case)

Camera cable specifications

Model	Cable length	Cable type	Cable Ø	Boost function*	Lighting
PCE-VE 320N	1000 mm	Semi-flexible	5.5 mm	No	4 LEDs
PCE-VE 320HR	1000 mm	Semi-flexible	5.5 mm	Yes	4 LEDs on the front 2 LEDs on the side
PCE-VE 330N	2000 mm	Semi-flexible	5.5 mm	No	4 LEDs
PCE-VE 333HR	3000 mm	Semi-flexible	5.5 mm	Yes	4 LEDs on the front 2 LEDs on the side
PCE-VE 340N	10000 mm	Flexible	5.5 mm	No	4 LEDs
PCE-VE 350N	1000 mm	Flexible	6.0 mm	No	4 LEDs
PCE-VE 350N3	3000 mm	Flexible	6.0 mm	No	4 LEDs
PCE-VE 350HR	1000 mm	Flexible	6.0 mm	Yes	4 LEDs on the front 2 LEDs on the side
PCE-VE 350HR3	3000 mm	Flexible	6.0 mm	Yes	4 LEDs on the front 2 LEDs on the side
PCE-VE 355N	1500 mm	Flexible	4.5 mm	No	5 LEDs
PCE-VE 355N3	3000 mm	Flexible	4.5 mm	No	5 LEDs
PCE-VE 360N	1000 mm	Semi-flexible	3.9 mm	No	3 LEDs
PCE-VE 370HR	1000 mm	Semi-flexible	6.0 mm	Yes	4 LEDs on the front 2 LEDs on the side
PCE-VE 370HR3	3000 mm	Flexible	6.0 mm	Yes	4 LEDs on the front 2 LEDs on the side
PCE-VE 380N	30000 mm	Semi-flexible	28 mm	No	8 LEDs
PCE-VE 390N	10000 mm	Semi-flexible	28 mm	No	8 LEDs

*The boost function improves the quality of pictures and videos in dark environments.

2.2 Delivery contents

1 x endoscope PCE-VE 3xxN or HR (one of the models)
1 x 8 GB SD card
1 x USB cable
1 x mains adaptor
1 x carrying case (PCE-VE 390 N: + carrying belts)
1 x instruction manual

3 System description

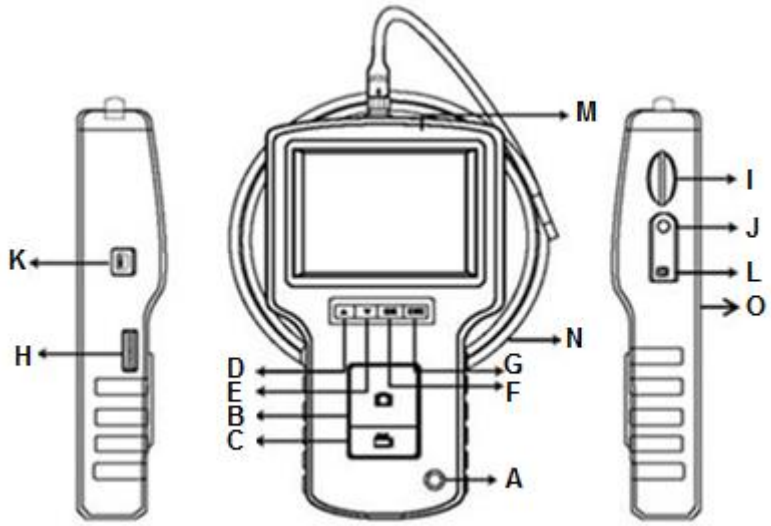

Function keys

A	power button		D	up button	▲
B	photo button		E	down button	▼
C	video button		F	OK button	**OK**
			G	escape button	**ESC**
H	illumination switch		L	mains connection	
I	SD card slot		M	Display	
J	AV out		N	camera cable/tube	
K	USB interface		O	reset button	

4 Getting started

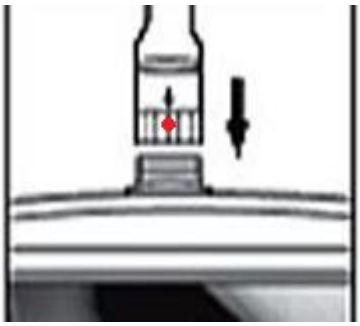

Connect the camera cable to the display unit and screw it tightly. Make sure that the indication on the connector is on the upper side (see picture above).

After that, press and hold the power button for approx. 5 seconds to turn on the device.
Now the display shows the following:

SD card capacity

Battery status

To turn off the device, press and hold the power button for 3 to 5 seconds.

5 Operation

5.1 Take a picture

To take a picture of the current image on the display, simply press the photo button .
The picture is stored on the SD card. After saving the picture, the device returns to the standard viewing mode.
You can press the escape button **ESC** to zoom in (2x digital zoom).
If you press and hold the escape button **ESC** for a few seconds, the image on the screens gets mirrored.

5.2 Record a video

To start recording a video, press the video button . An indication appears on the display showing that video recording is in progress. Press the video button again to stop the recording. The video is stored on the SD card automatically.
You can press the escape button **ESC** to zoom in (2x digital zoom).
If you press and hold the escape button **ESC** for a few seconds, the image on the screens gets mirrored.

5.3 View data

To view the stored pictures and videos, press the up ▲ or down ▼button in standard viewing mode. Now you can use these buttons to navigate through all pictures and videos. The data is sorted by date of recording.
To delete a file, select it and press the **OK** button. A confirmation window appears on the display. Use the up ▲ or down ▼button to choose “Yes” if you want to delete the file or choose “No” to cancel. After selecting the desired option, press the **OK** button to confirm.

5.4 Settings

Press the **OK** button in standard viewing mode to enter the settings menu. Here you have the following options:

- **DELETE ALL FILES**
- **AV OUTPUT**
- **DATE / TIME**
- **LANGUAGE**
- **TV SYSTEM**
- **AUTO POWER OFF**

Reset

To set the device back to factory default settings, press the reset button on the back of the device.

Delete all files

To delete all files, select the “DELETE ALL FILES” option in the settings and press the **OK** button. After that, use the up ▲ and down ▼ button to select “Yes” if you want to delete all files or select “No” to cancel. After selecting the desired option, press the **OK** button to confirm.

AV output

Connect the AV out to an external display unit, choose the “AV OUTPUT” option and press the **OK** button. The display of the endoscope turns black and the image is shown on the external display unit. To exit this mode, press the **OK** button again.

Date / Time

To adjust the time and date settings, select the “DATE / TIME” option and press the **OK** button. Now you can use the up ▲ and down ▼ button to move between the parameters year, month and day, as well as hours, minutes and seconds. Move to the desired parameter and use the photo and video button to adjust the value.
If you want the date and time to be displayed on each picture and video, move to the “Display” option and choose “Yes”. Choose “no” if you do not want date and time to be shown on each picture and video.

Language

To change the language of the device, select the “LANGUAGE” option and press the **OK** button. Now you are in the language selection screen. Use the up ▲ and down ▼ button to select the desired language and press the **OK** button to confirm.

TV system

To change the TV system / video output format, select the “TV SYSTEM” option and press the **OK** button. Here you can choose between “PAL” and “NTSC”. Use the up ▲ and down ▼ button to select the desired option and press the **OK** button to confirm.

Auto power off

To adjust the auto power off settings, select the “AUTO POWER OFF” option and press the **OK** button. Now you can choose between different time settings. Select the desired option by using the up ▲ and down ▼ button and press the **OK** button to confirm.

6 HR camera cable (PCE-VE 3xxHR or optional)

6.1 Safety notes

In addition to the general safety notes of the PCE-VE 3xxN device, please mind the following safety notes to prevent damage and injuries when using the HR camera cable.

- To avoid dangerous situations, make sure that the probe does not get in touch with inflammable liquids or gases.
- The HR cable includes various small cables which control the optics and electronics of the camera tip. To ensure high reliability, do not bend the cable to an angle of more than 90 ° and store the cable as little bent as possible.
- Do not disassemble the device as this can cause damage and electric shocks.
- Do not expose the device to direct sunlight and store it in a cool, dry, sufficiently ventilated place.
- To protect the camera module, make sure the protection ring is on the camera head as long as no accessories are in use.

- Do not apply force to the end of the cable and do not bend it. This can deteriorate your vision and even damage the probe.

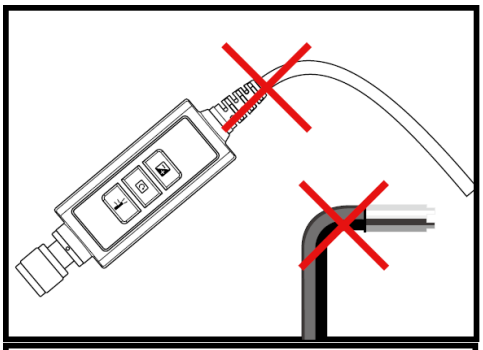

- When you roll up the cable, the inner diameter must be at least 15 cm.

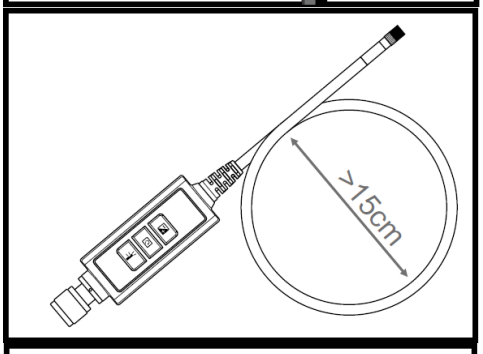

- Put the protection ring back on and tighten it when not using the device for a longer period of time.

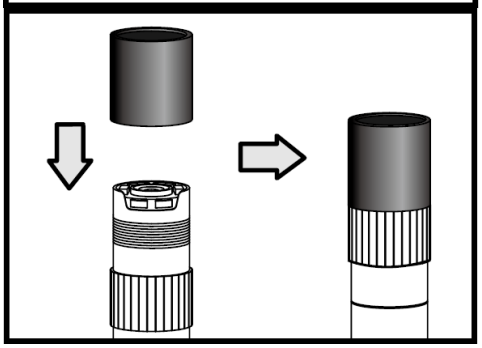

- Do not crash the probe head.

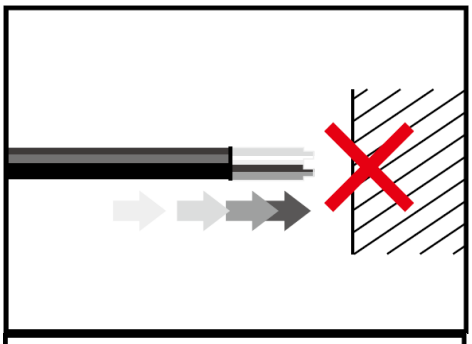

- Make sure that the camera does not get in contact with the following liquids:
  lead-free petrol, diesel oil, machine oil, brake fluid, transmission oil and water.

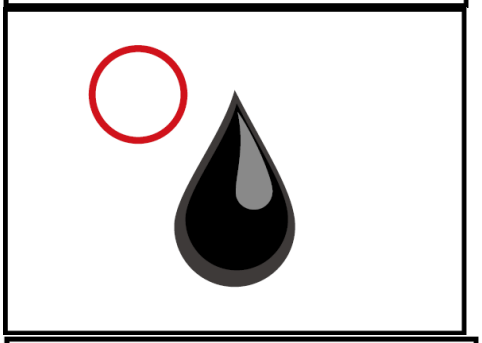

- Do not screw the accessories on too tightly. Only screw it slightly until it is fixed.

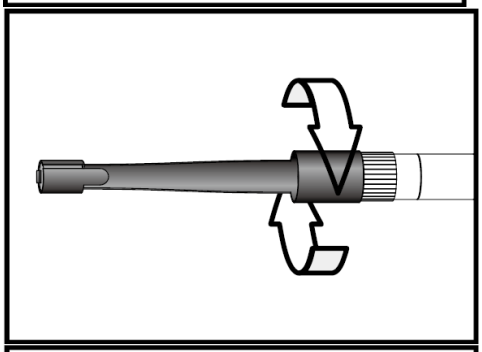

- To clean the camera head, use the cleaning liquid and the swabs provided in the cleaning kit.

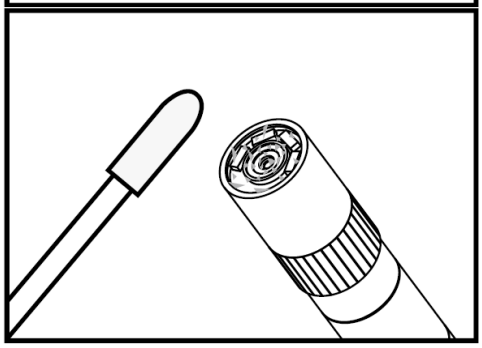

6.2 Technical specifications

Length of camera head	20 mm
Diameter with protection ring	6 mm
Depth of field	10 … 60 mm
Field of view	60.7 °
Protection class	IP67

6.3 System description

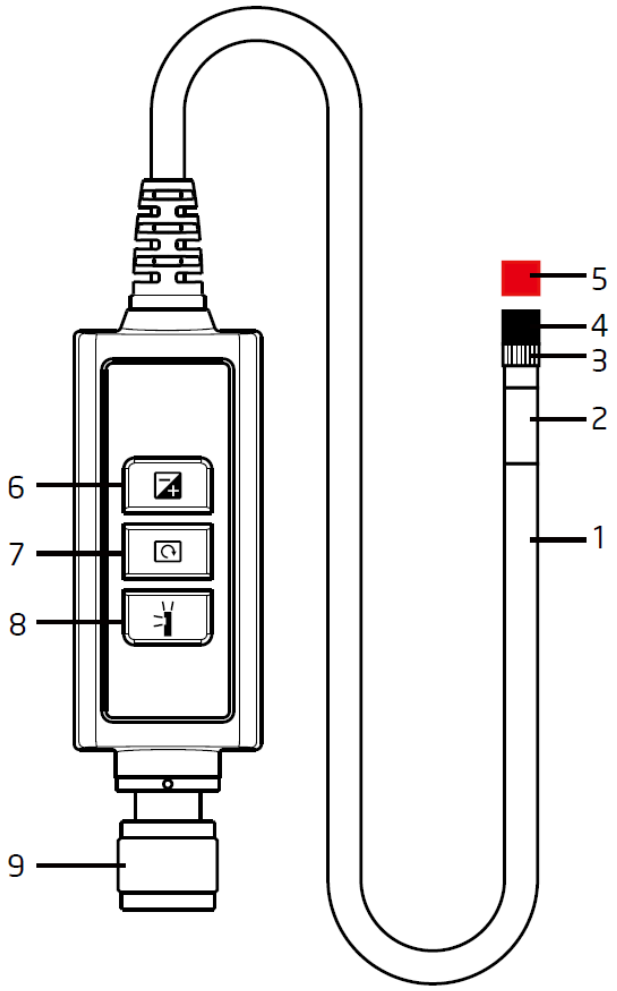

1. **Probe:** to guide the camera
2. **Camera head:** for illumination and capturing
3. **Assembly ring:** to attach accessories
4. **Protection ring**: to protect the thread
5. **Red cap:** protects the camera when not in use
6. **Boost key:** for better illumination in dark environments
7. **Rotation key:** Press once to turn the display counter-clockwise by 90 °. The red LED will light up. The LED will stop glowing when the original position has been reached.
8. **Light key:** This key activates a mirror which enables particle-free vision.
9. **Connector**

6.4 Getting started

Connection

Step 1: Connect the main unit with the connector and fix it with the screw mechanism.
Step 2: Switch on the system. You should now see a picture in the display.

Attachment of the accessories

Mirror

Step 1: Unscrew the thread protection ring.
Step 2: Screw the assembly ring down to the bottom.
Step 3: Screw the mirror attachment onto the thread until the thread is completely covered.

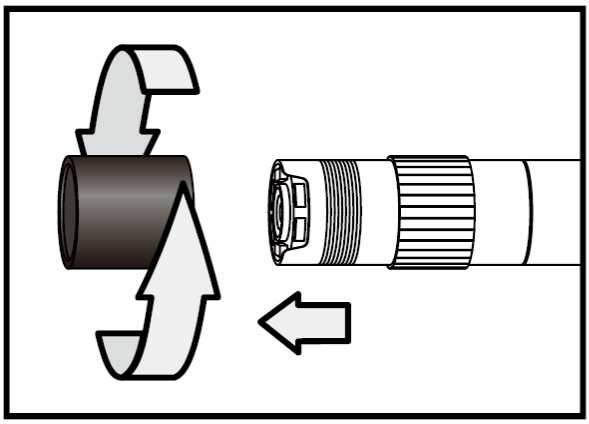

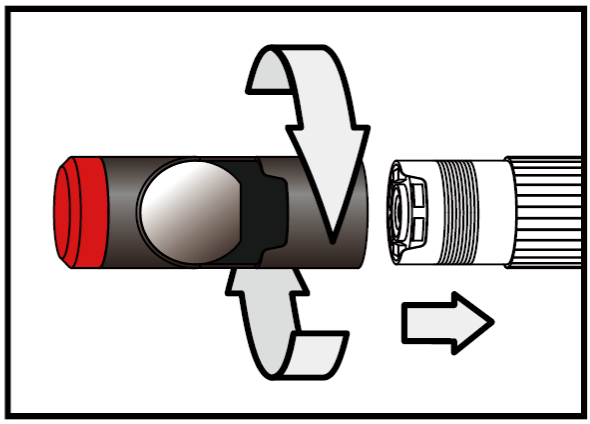

Step 4: Align the lateral LED opening of the mirror attachment in a way that the LEDs are uncovered.
Step 5: Turn the assembly ring upwards in order to fix the mirror attachment.

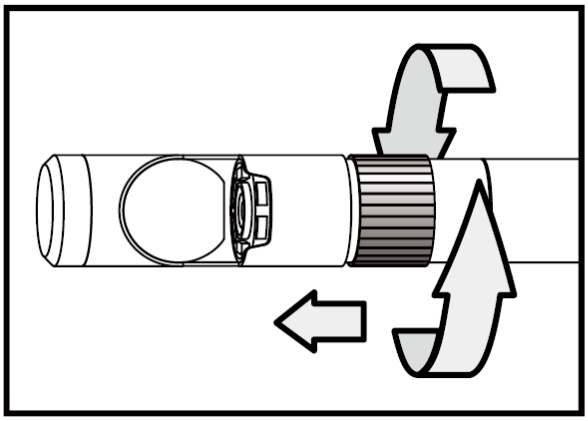

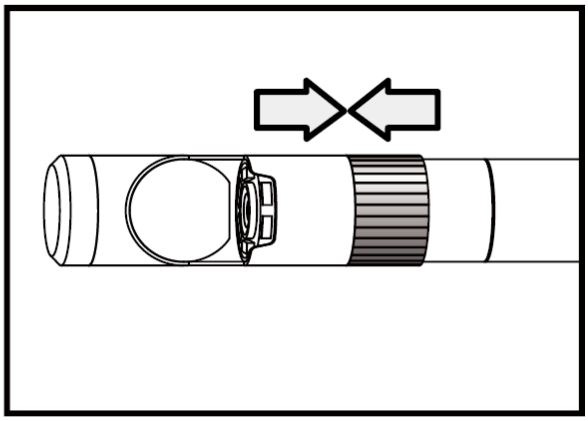

Step 6: Press the light key to activate the lateral light.
Step 7: Adjust the light intensity as required to ensure ideal vision to the side.

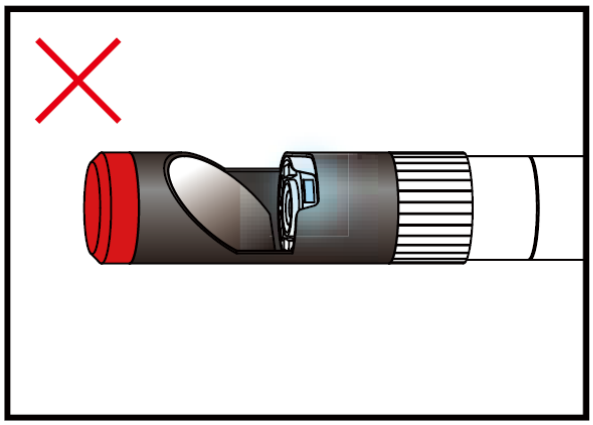

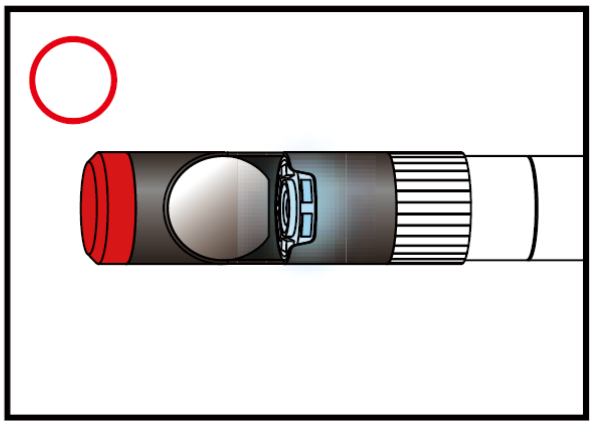

(Steps 4-5 must be repeated until the right position is reached)

Magnetic hook
Step 1: Turn the assembly ring down to the bottom.
Step 2: Screw the magnetic hook on until it snaps in.

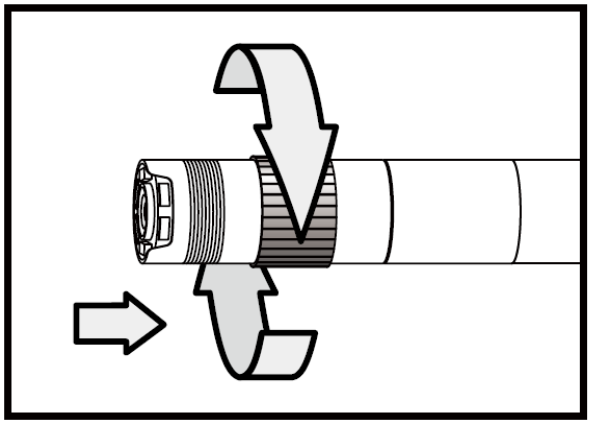

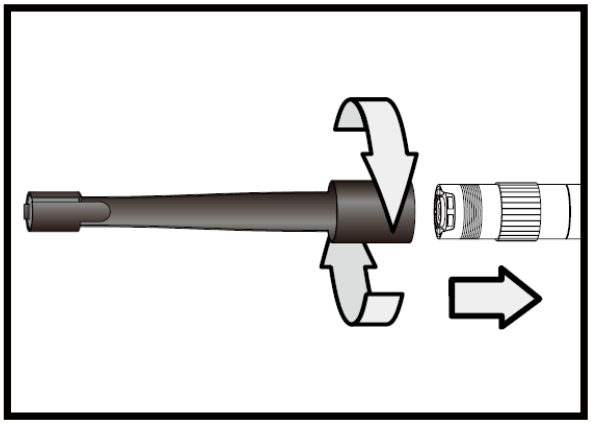

Climbing ball
Step 1: Remove the assembly ring.
Step 2: Screw the climbing ball on until it snaps in.

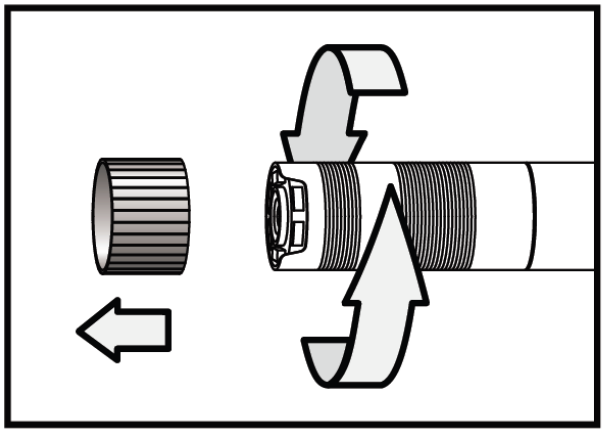

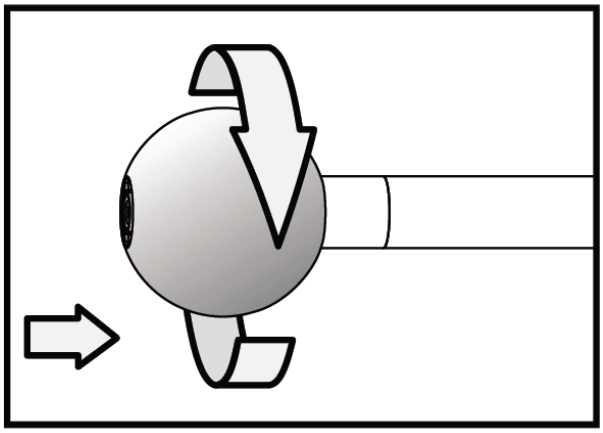

6.5 Operation

Boost key
Use this key in a dark environment. The red LED indicates that the Boost function has been activated. The image will be lightened up.
Note: Hold the probe steady.

Before “boosting”

After “boosting”

Rotation key

You can use this key to turn the image by 90 ° four times, for instance, when trying to read an inscription completely.

Light key

When using the mirror attachment, this key improves the vision which will not be impeded by particles, dust, etc.

Without “particle free” function

With “particle free” function

7 Articulating camera cable (PCE-VE 350N / HR / N3 / HR3 only or optional)

7.1 Safety notes

In addition to the general safety notes of the PCE-VE 3xxN device, please mind the following safety notes to prevent damage and injuries when using the pivoting camera head.

- Do not bend the pivoting camera head by hand. Only use the rotary switch to adjust the angle.
- Do not try to rotate the rotary switch any further when it has already been rotated all the way to the stop.
- Do not expose the device to extreme temperatures, direct sunlight, extreme air humidity or moisture. Only use the pivoting camera head at temperatures between 0 and +55 °C.
- If you coil up the camera cable for storing, make sure the diameter is at least 15 cm and that the camera head is in a straight position.
- Do not expose the camera head to mechanical strains and stresses.

7.2 System description

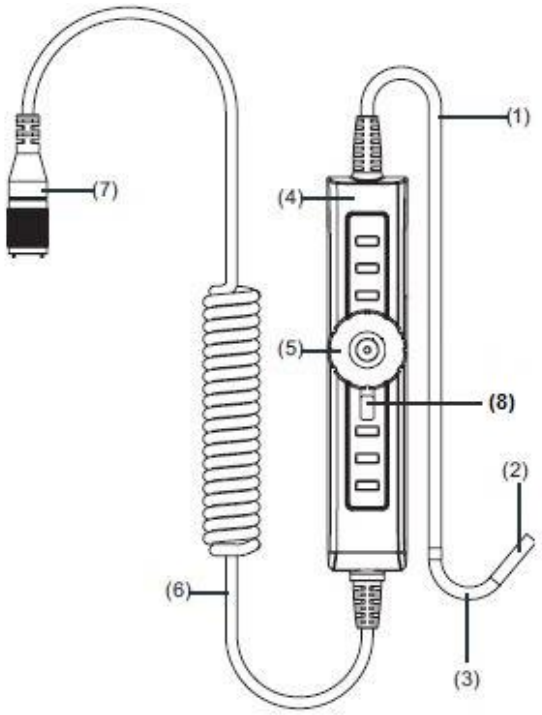

1. Camera cable
2. Camera head
3. Gooseneck
4. Operating unit
5. Rotary switch for gooseneck
6. Connecting cable
7. Connector
8. Locking lever

7.3 Getting started

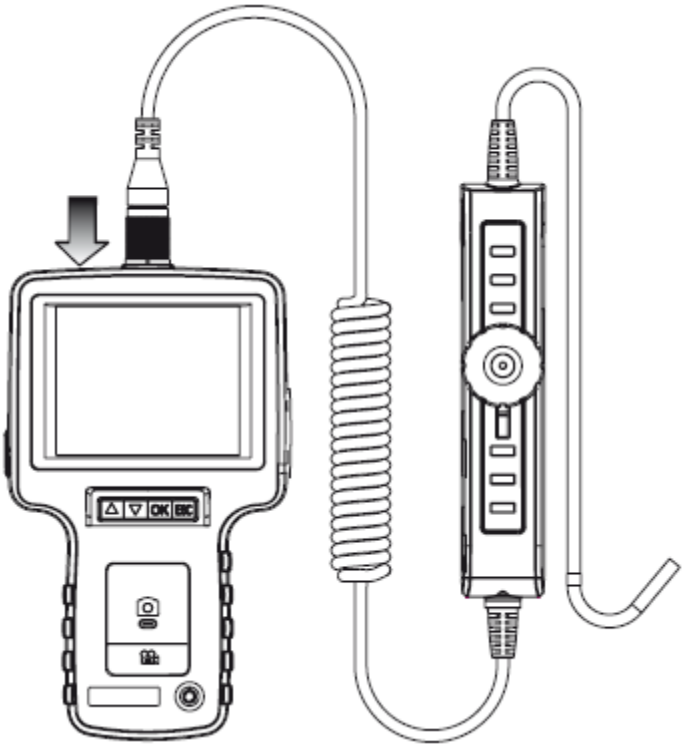

Connect the connecting cable to the display unit of the endoscope and screw it tightly. Make sure that the indication on the connector is on the upper side.

7.4 Operation

1. By using the rotary switch, you can pivot the camera head. Turn the switch in a clockwise motion to pivot the camera head to the right or in a counter-clockwise motion to pivot the camera head to the left.

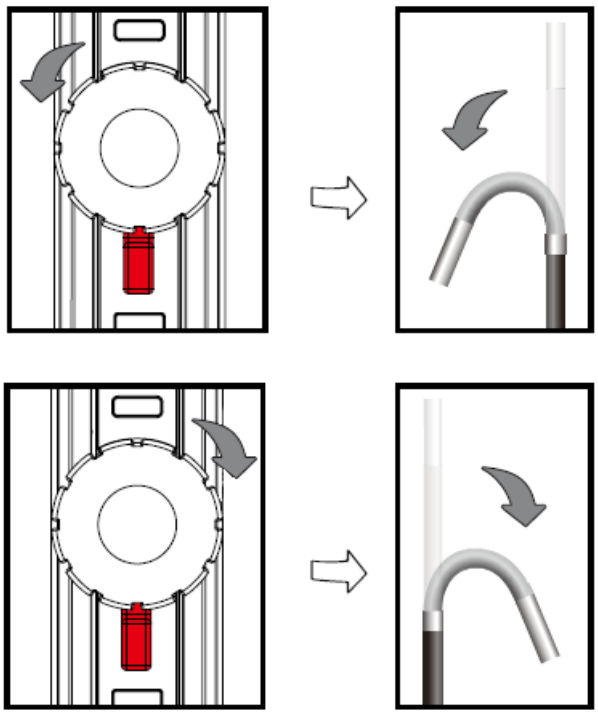

2. You can lock the pivoting angle of the camera head by using the red locking lever. To lock the camera head, carefully push the lever clockwise all the way to the stop. To unlock the camera head carefully push the lever counter-clockwise, until it reaches its starting point.

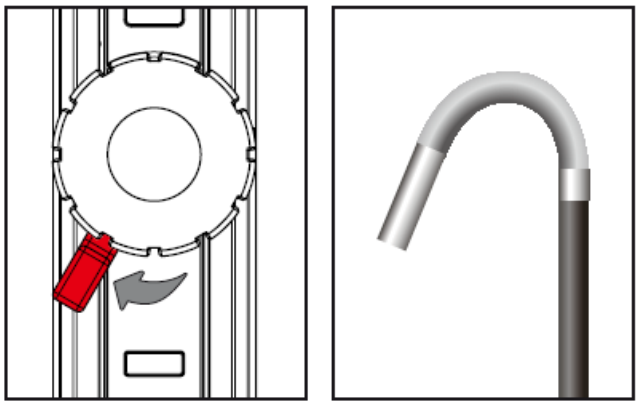

8 HR camera cable with 360° articulating camera head (PCE-VE 370HR3 or optional)

8.1 Safety notes

In addition to the general safety notes of the PCE-VE 3xxN device, please mind the following safety notes to prevent damage and injuries when using the HR camera cable with 360° articulating camera head.

- To avoid dangerous situations, make sure that the probe does not get in touch with inflammable liquids or gases.
- Do not disassemble the device as this can cause damage and electric shocks.
- To protect the camera module, make sure the protection ring is on the camera head as long as no accessories are in use.
- Do not bend the articulating camera head by hand. Only use the joystick to adjust the angle.
- Do not expose the device to extreme temperatures, direct sunlight, extreme air humidity or moisture. Only use the device at temperatures between 0 and +60 °C. Store it in a cool, dry, sufficiently ventilated place.
- If you coil up the camera cable for storing, make sure the diameter is at least 15 cm and that the camera head is in a straight position.
- Do not expose the camera head to mechanical strains and stresses.

8.2 Technical specifications

Camera head diameter	6 mm
Camera cable	Length: 3 m; water proof
Swivel mechanism	Camera head can be swivelled by 110° in all directions
Illumination	LEDs on the front and on the side
Operating and storing temperature	0 … +60 °C
Weight	800 g

8.3 System description

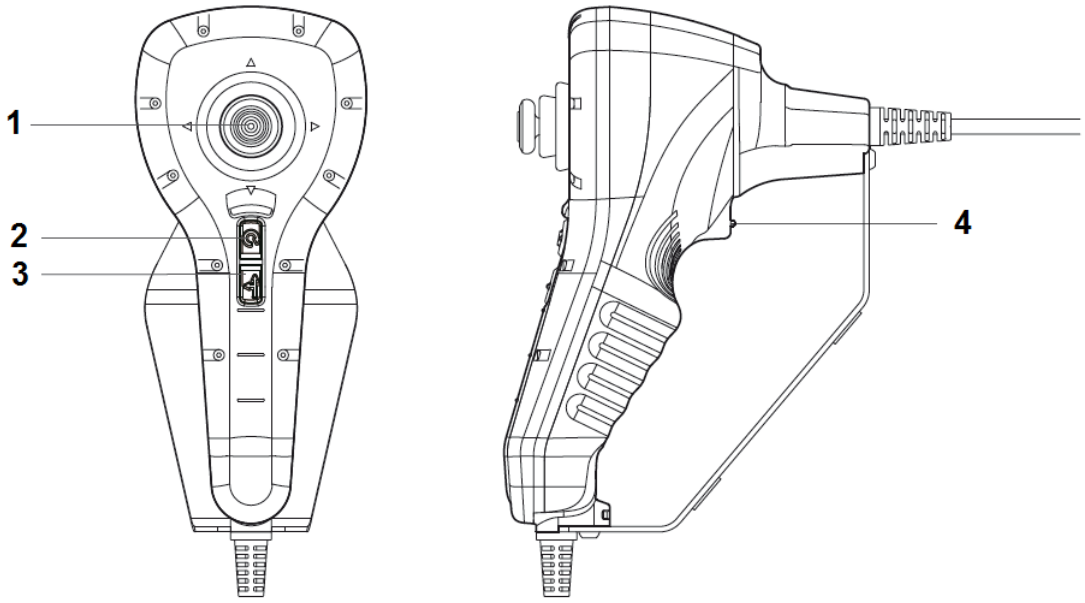

1. Joystick
2. Rotation key
3. Light key
4. Boost key

8.4 Getting started

Attachment of the accessories

Mirror
Step 1: Unscrew the thread protection ring.
Step 2: Screw the assembly ring down to the bottom.
Step 3: Screw the mirror attachment onto the thread until the thread is completely covered.

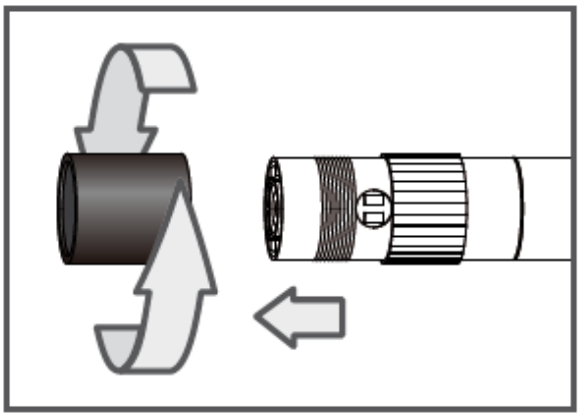

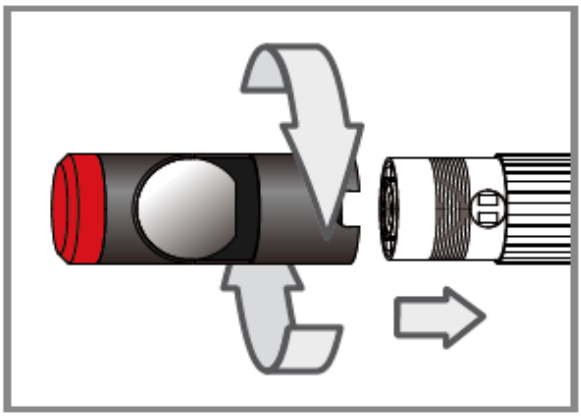

Step 4: Align the lateral LED opening of the mirror attachment in a way that the LEDs are uncovered.
Step 5: Turn the assembly ring upwards in order to fix the mirror attachment.

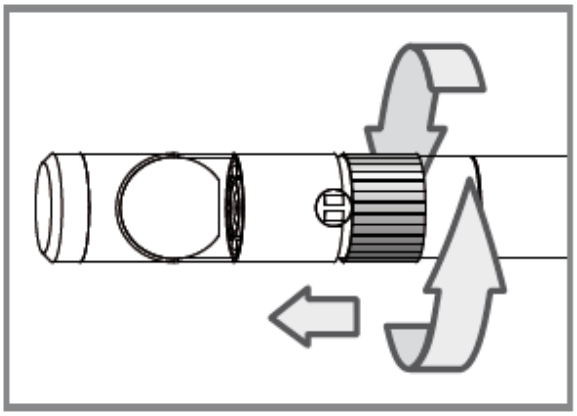

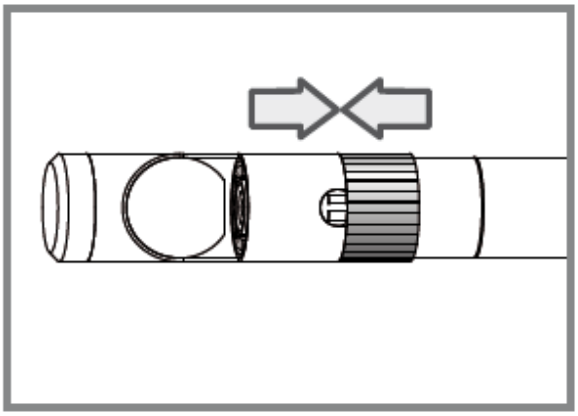

Step 6: Press the light key to activate the lateral light.

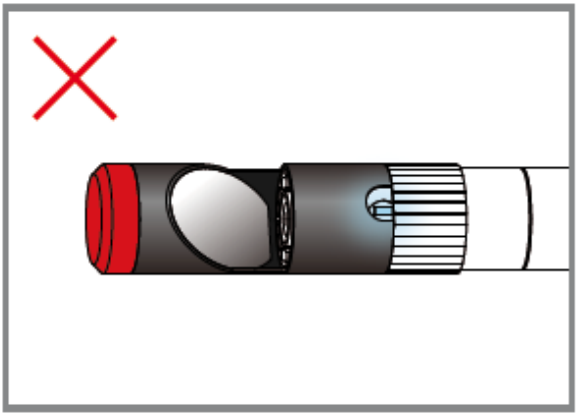

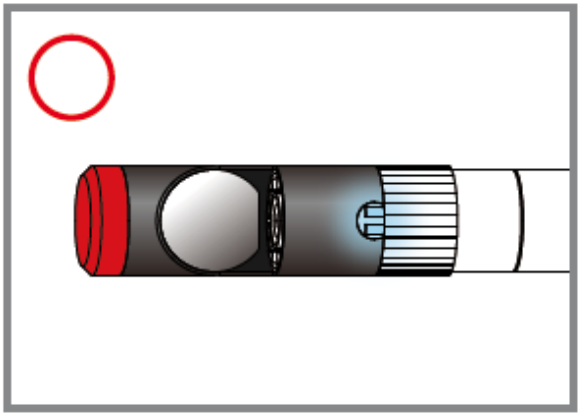

(Steps 4-5 must be repeated until the right position is reached)

8.5 Operation

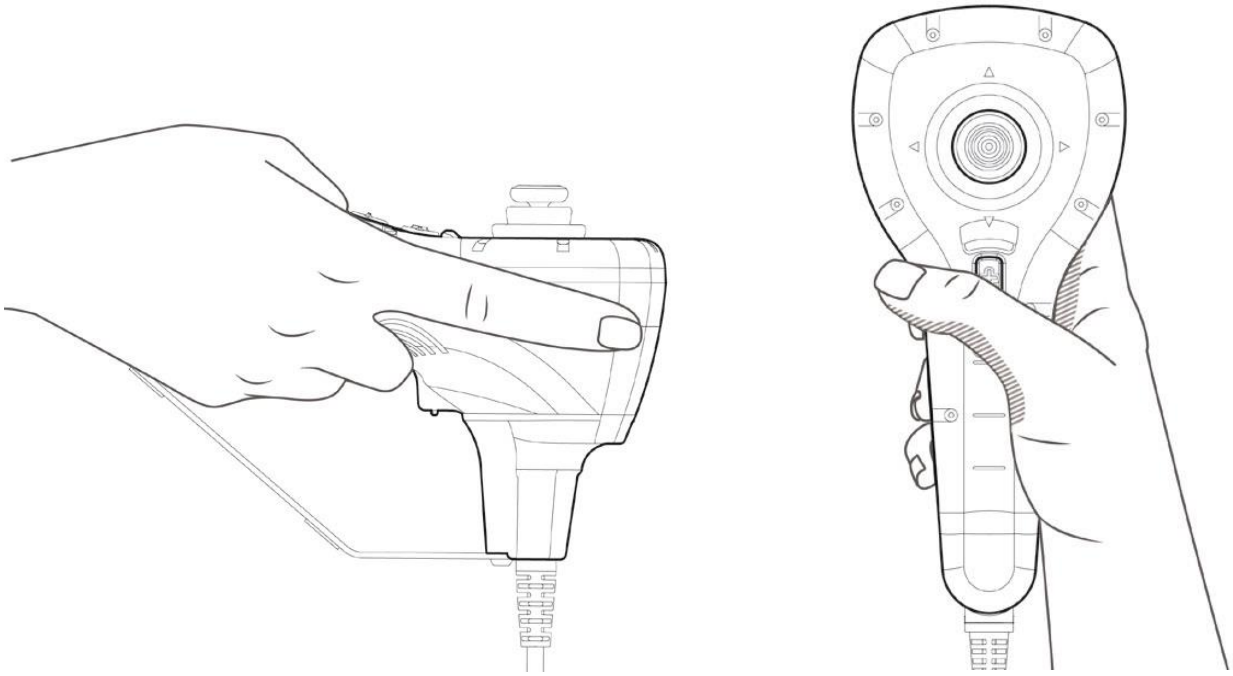

Hold the device with one hand and use your thumb for operating the joystick and the function keys. With your index finger, you can use the boost key.

Use the joystick to adjust the swivelling angle and direction of the camera head.

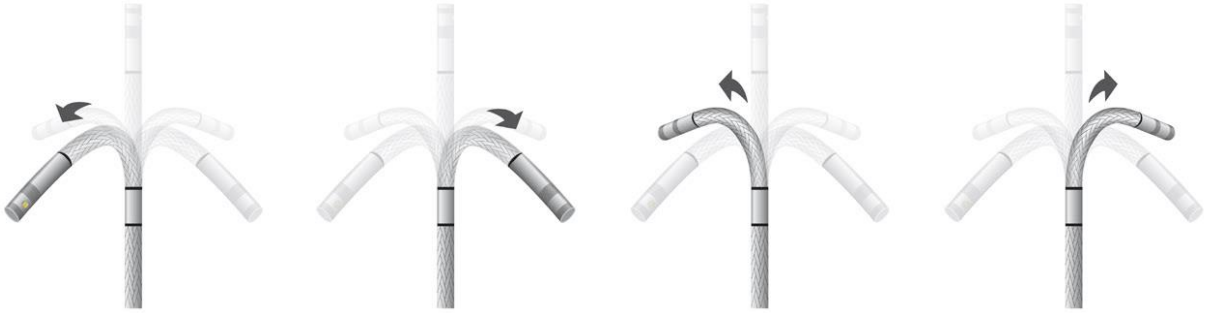

Boost key

Use this key in dark environments to lighten up the image.
Note: Hold the camera cable steady to get a clear image.

before “boosting”

after “boosting”

Rotation key

Use this key to rotate the image by 90 °, for instance, when trying to read an inscription completely.

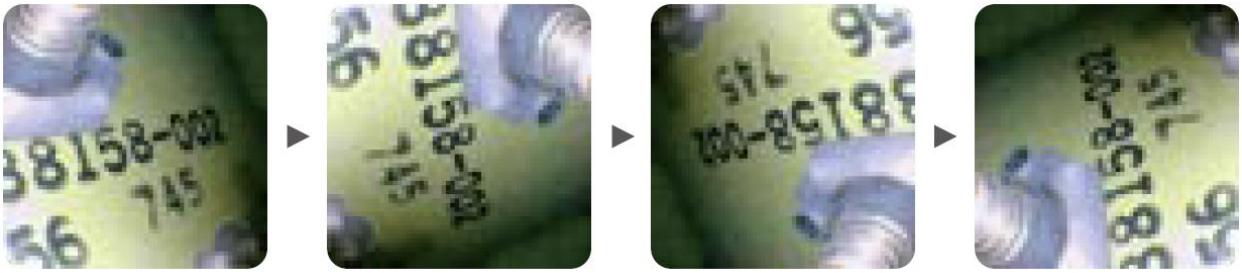

Light key

Use this key in combination with the mirror attachment to improve the vision which will not be impeded by particles, dust, etc.

without “particle free” function

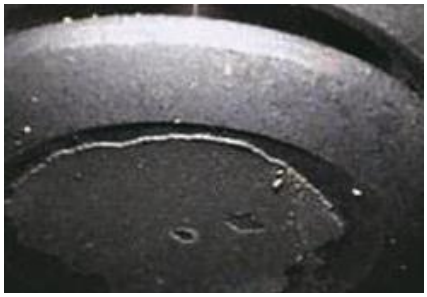

with “particle free” function

9 PCE-VE 380N

9.1 Safety notes

In addition to the general safety notes of the PCE-VE 3xxN device, please mind the following safety notes to prevent damage and injuries when using the camera cable and the accessories of the PCE-VE 380N.

- When rolling the camera cable out or in, be very careful to prevent mechanical damage due to tensile or compressive strain.
- You can move the camera cable around corners from 90° upwards. If the corner is narrower than 90°, this might interfere your measurement and even cause damage to the product.
- Do not use the camera cable to inspect fuel tanks or other environments with explosive or inflammable atmospheres.
- To clean the whole set, wash it with water and dry it with a cloth or let it dry. Do not sluice it with a hose or a high-pressure cleaner.
- Do not expose the device to direct sunlight and store it in a cool, dry, sufficiently ventilated place.

9.2 Technical specifications

Cable drum

Diameter	300 mm
Operating temperature	-10 … +60 °C
Weight	3.5 kg

Cable

Diameter	6 mm
Length	30 m
Bending radius	150 mm
Weight	100 g/m

Camera head

Camera diameter	28 mm
Camera length	24.3 mm
Depth of field	10 mm … ∞
Field of view	150.8 ° (diagonal)
Lighting	8 LEDs (white)
Operating temperature	-10 … +60 °C
Fitting pipe diameters	Ø 40 … 100 mm

Cable measuring device

Measuring units	m / ft
Counting	Forward / backward
Accuracy	±0.4 m (±1.3 ft)
Display	3 digits (1 decimal place)
Protection class	IP 55
Power supply	2 x 1.5 V AAA batteries
Battery life	≥ 90 hours
Dimensions	62 x 110 x 24 mm

9.3 System description

PCE-VE 380N

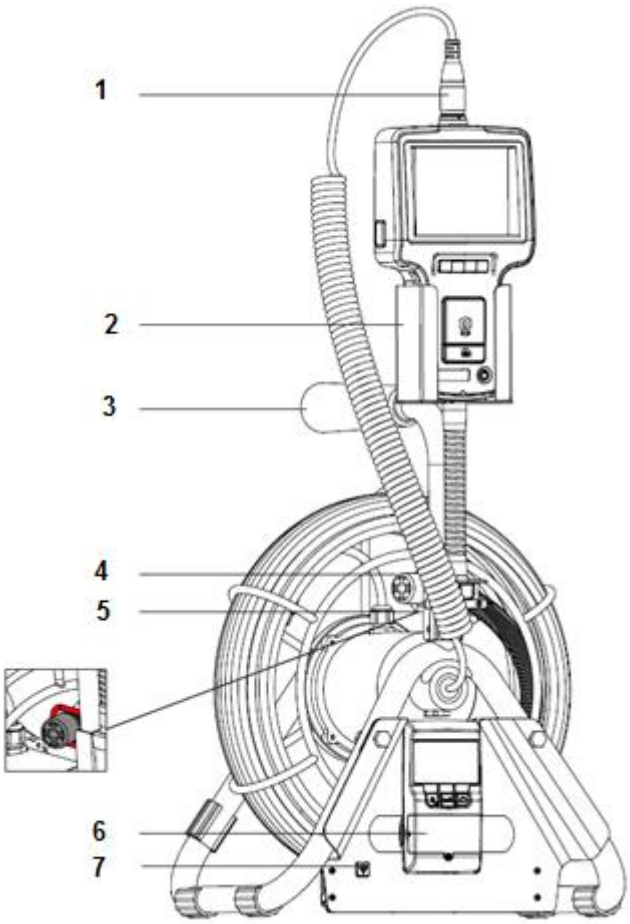

1. Connection to display unit
2. Support for display unit
3. Handle
4. Camera head
5. Support for camera head
6. Cable measuring device
7. No function

Cable measuring device

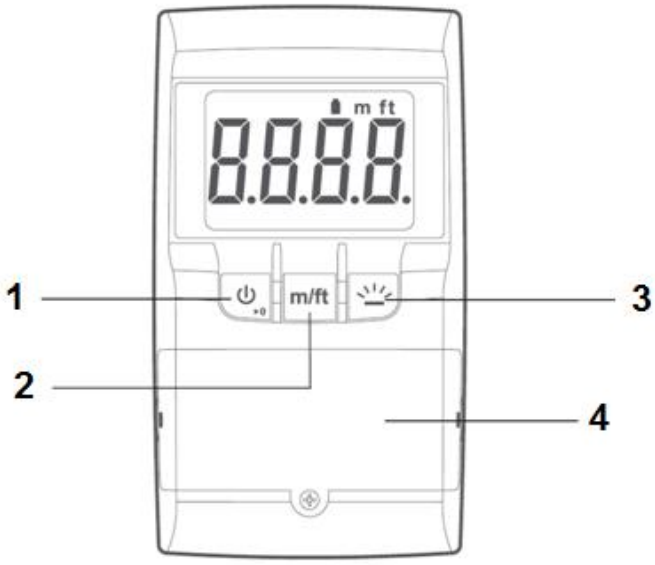

1. ON/OFF/RESET button ⏻
2. **m/ft** button
3. Display backlight button
4. Battery compartment

Camera cable

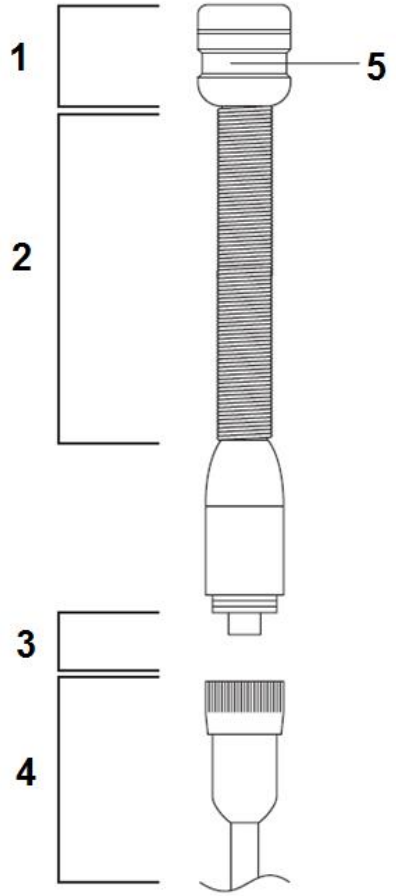

1. Camera head
2. Semi-flexible camera cable
3. Connection
4. Camera cable
5. Mounting ring

9.4 Getting started

Battery replacement

Transmitting unit

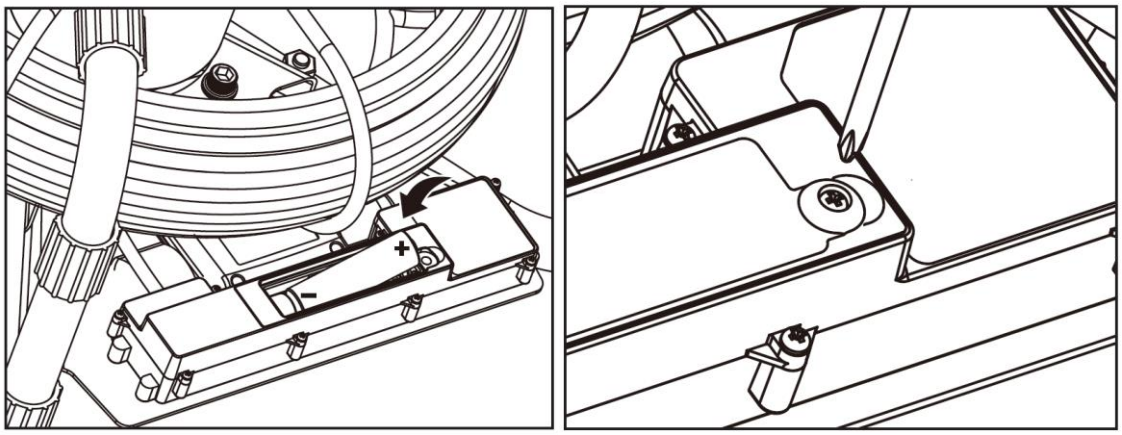

The battery compartment of the transmitting unit is located at the back of the unit. To open it, you have to loosen a screw first. After that, you can open the battery compartment and replace the batteries.

Cable measuring device

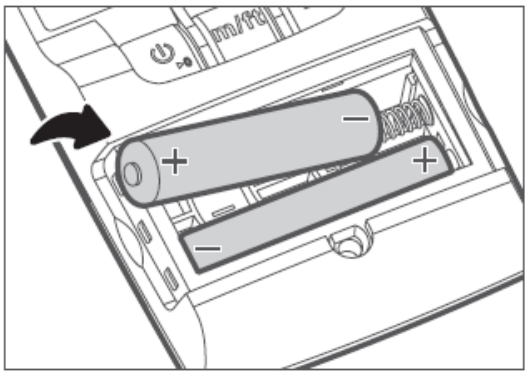

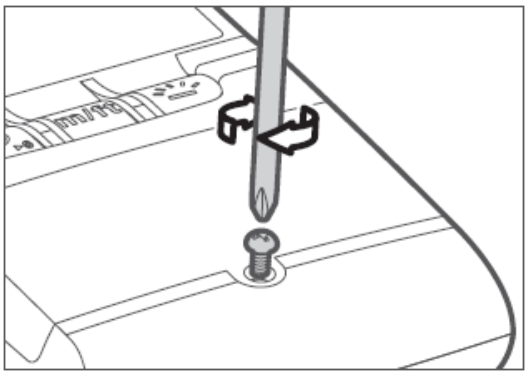

The battery compartment of the cable measuring device is located at the front, right below the function keys. To open it, you have to loosen a screw first. After that, you can open the battery compartment and replace the batteries.

Installation

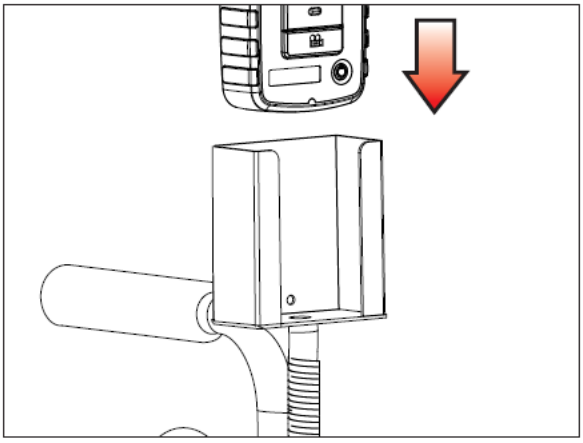

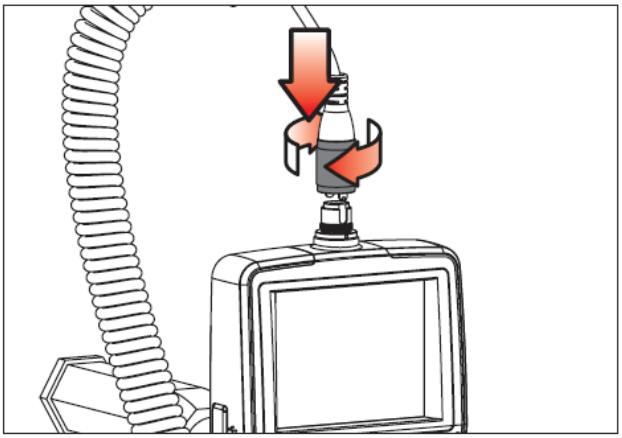

1. Place the display unit in the support.
2. Connect the camera cable to the display unit and screw it tightly.

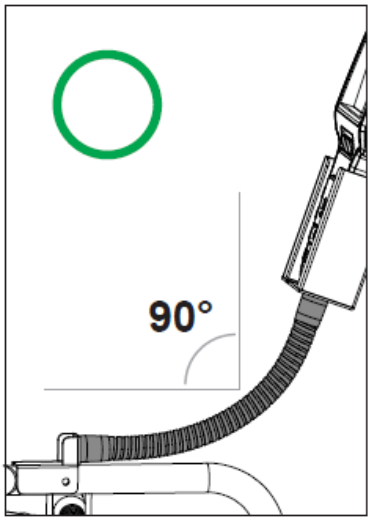

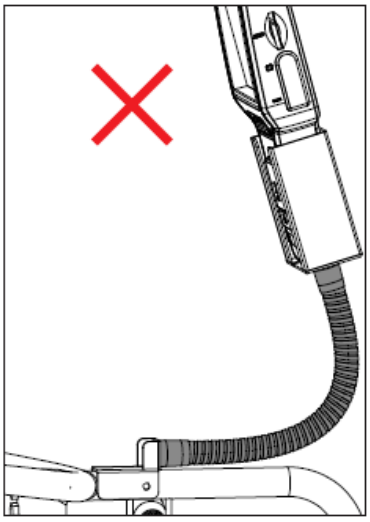

You can adjust the angle of the display support at any time, but do not use angles smaller than 90° cause this might damage the support.

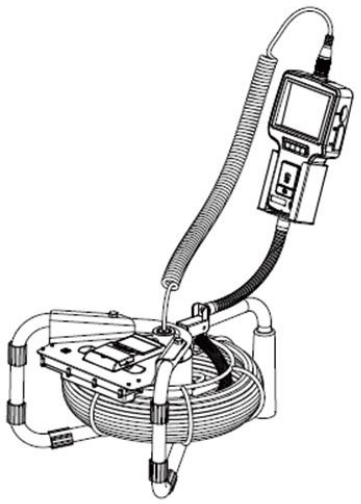

The PCE-VE 380N can also be used in horizontal position.

9.5 Operation

Pulling out the cable

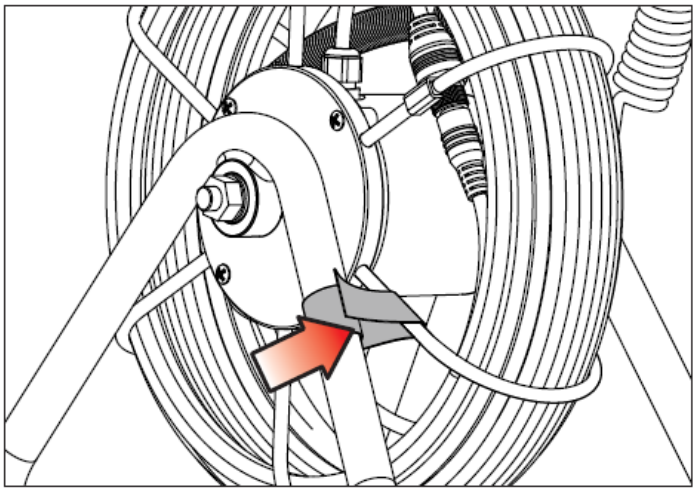

1. Before pulling out the camera cable, loosen the cable drum fixing first.

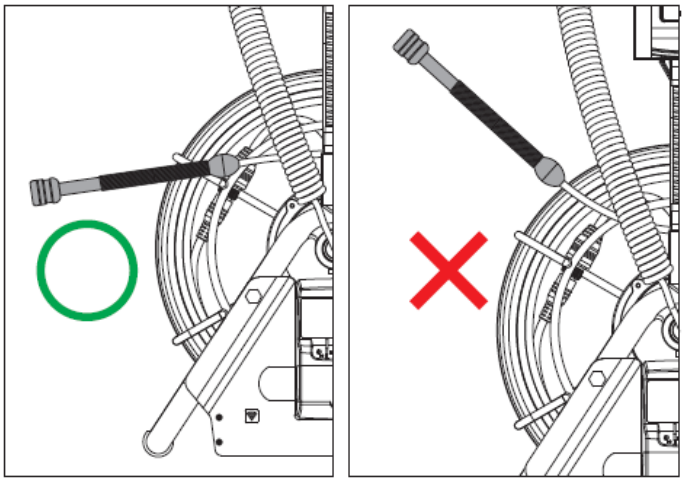

2. Pull out the camera cable horizontally. Do not pull it out in an angle larger than 45° to the camera head support.

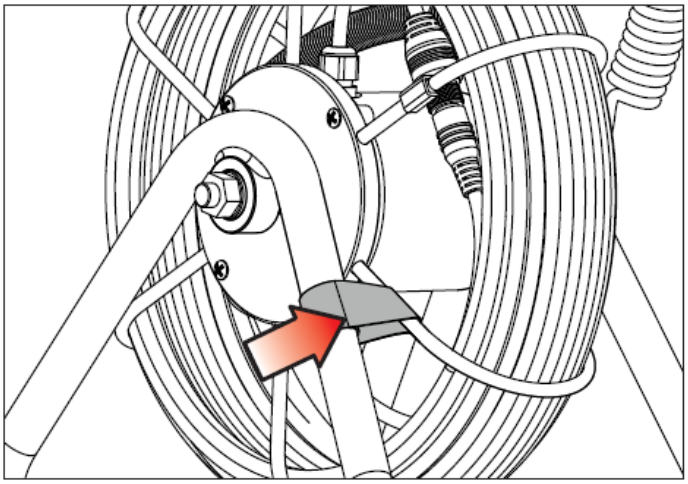

3. Once you have reached the desired cable length, fix the cable drum to prevent it from rolling out any further.

Coiling up the cable

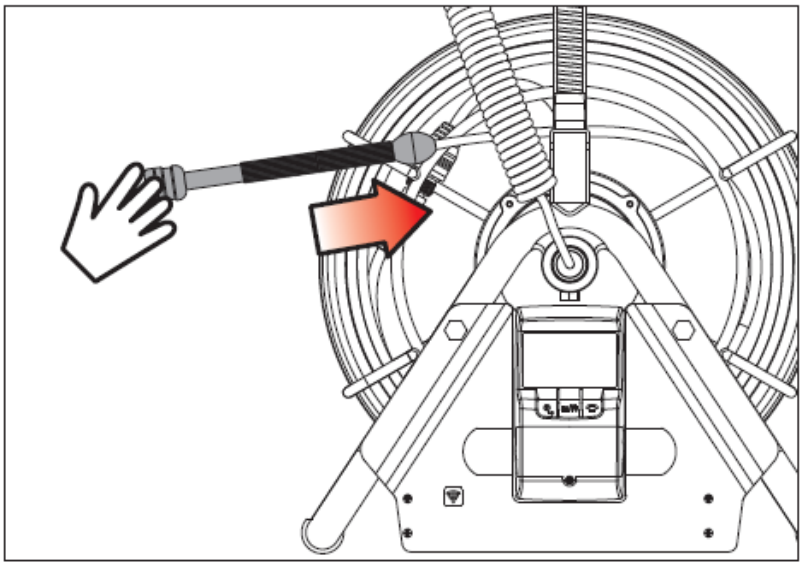

1. Hold the camera head horizontally and carefully coil up the cable.

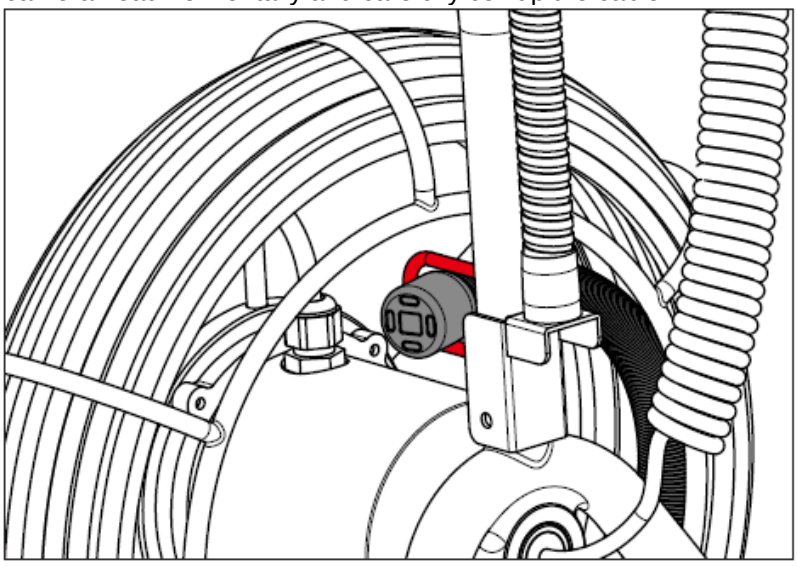

2. When the camera cable is coiled up completely, place the camera head in the camera head support.
4. Fix the cable drum to prevent the cable from rolling out.

Cable measuring device

To turn on the device, press and hold the OF/OFF button ⏻ for 3 seconds.

You can reset/restart the device at any time by pressing and holding the ON/OFF button ⏻ for 1 second.

To switch the measuring unit between m and ft, press the "**m/ft"** button.

Press the backlight button to activate the display backlight. The display backlight is active for 10 seconds.

To turn off the device, press and hold the ON/OFF button ⏻ for 3 seconds.
The device also has an automatic power-off function which turns it off automatically after 1 hour of idling time.

If the display shows a battery indication , please replace the batteries.

Centring star

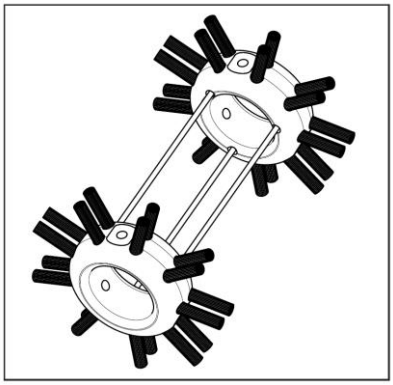

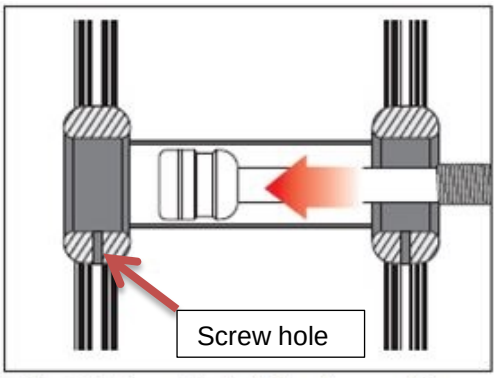

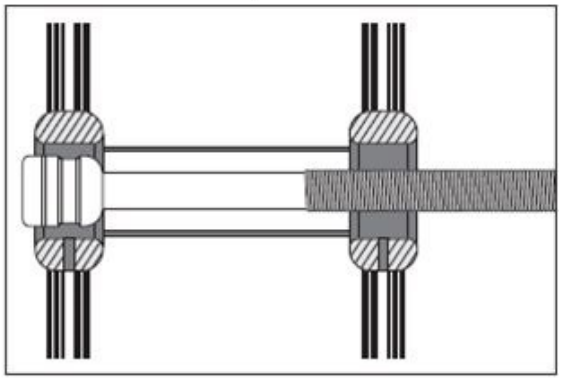

1. Put the camera head in the centring star attachment and align the mounting ring with the screw holes.
2. Put the screws in the screw holes and fasten the camera head.

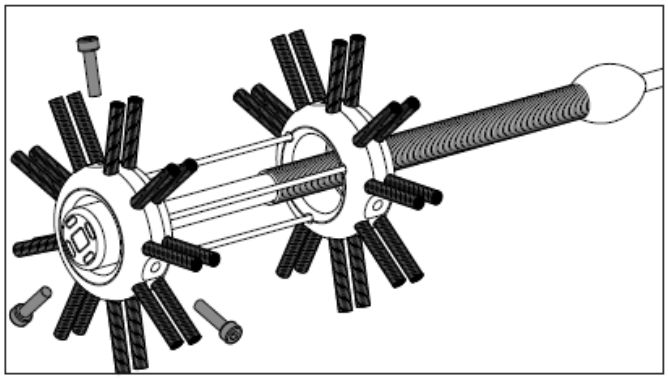

Cleaning

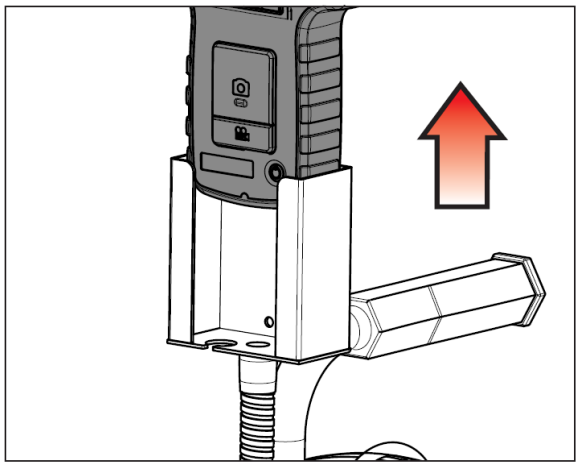

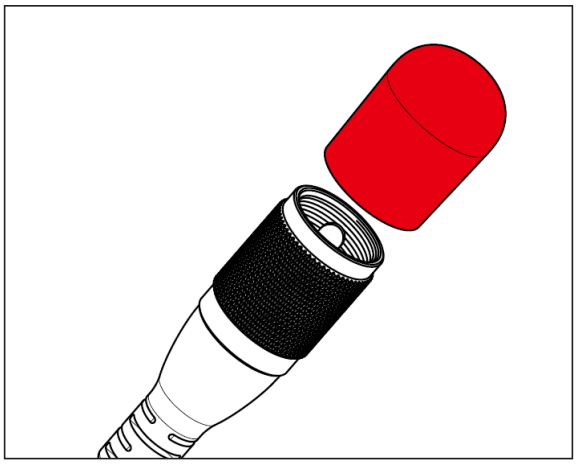

1. Remove the display unit from the support.
2. Put the protecting hood on the connector of the camera cable.
3. Wash the cable drum with water and let it dry for a few minutes.
4. If necessary, dry the cable drum with a dry cloth before putting it back into the carrying case.

10 PCE-VE 390N

10.1 Safety instructions

- Do not use the camera cable to inspect fuel tanks or other environments with explosive or inflammable atmospheres.
- When bending or rolling up the camera tube make sure that the bending diameter is more than 30 cm. Otherwise it can cause damage to the tube.
- Pay attention when pushing the camera tube in the object to be inspected or when pulling it back out. The camera tube is a high-strength structure which can be used for pushing obstacles in pipes. However, due to its rigidity, it might unwind from the carrying system when pulling it out.
- Do not expose the device to direct sunlight and store it in a cool, dry, sufficiently ventilated place.
- The display unit is not waterproof. Remove the display unit and the connector before cleaning the camera tube and the carrying system.

10.2 Technical specifications

Carrying system

Dimensions	490 x 450 x 60 mm
Weight	1222 g (without display unit and camera tube)

Camera tube

Length	10 m
Diameter	6 mm
Bending diameter	30 cm
Weight	100 g / meter

Camera head

Diameter	28 mm
Length	24.3 mm
Depth of field	10 mm … ∞
Field of view	150.8 °
Illumination	8 LEDs (white)
Environmental temperature	-10 … +70 °C
Protection class	IP 68 (10 m)
Pipe diameter	Ø 40 mm … Ø 100 mm

10.3 System description

Carrying system

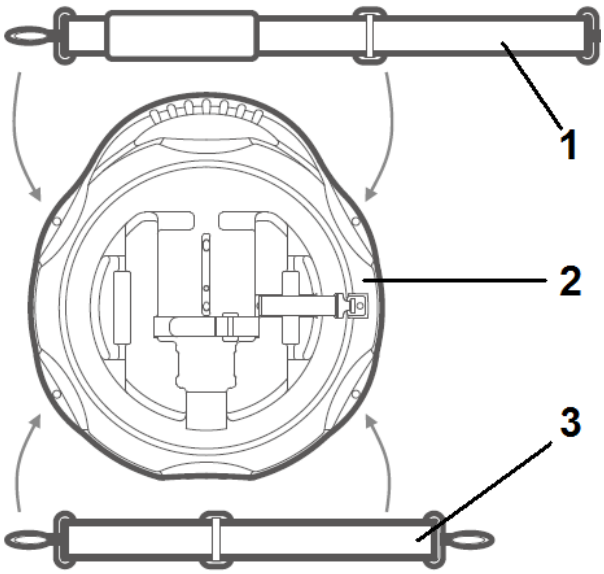

1. Neck strap
2. Carrying system
3. Hip belt

10.4 Getting started

Inserting the display unit

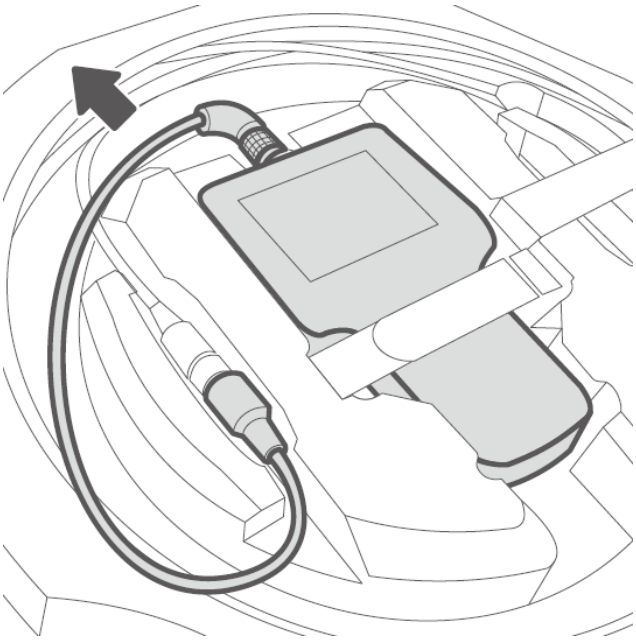

Insert the display unit into the carrying system as seen in the picture above.
Use the connecting cable to connect the display unit to the camera tube,
Roll up the camera tube on the carrying system.

Attaching and wearing the carrying straps

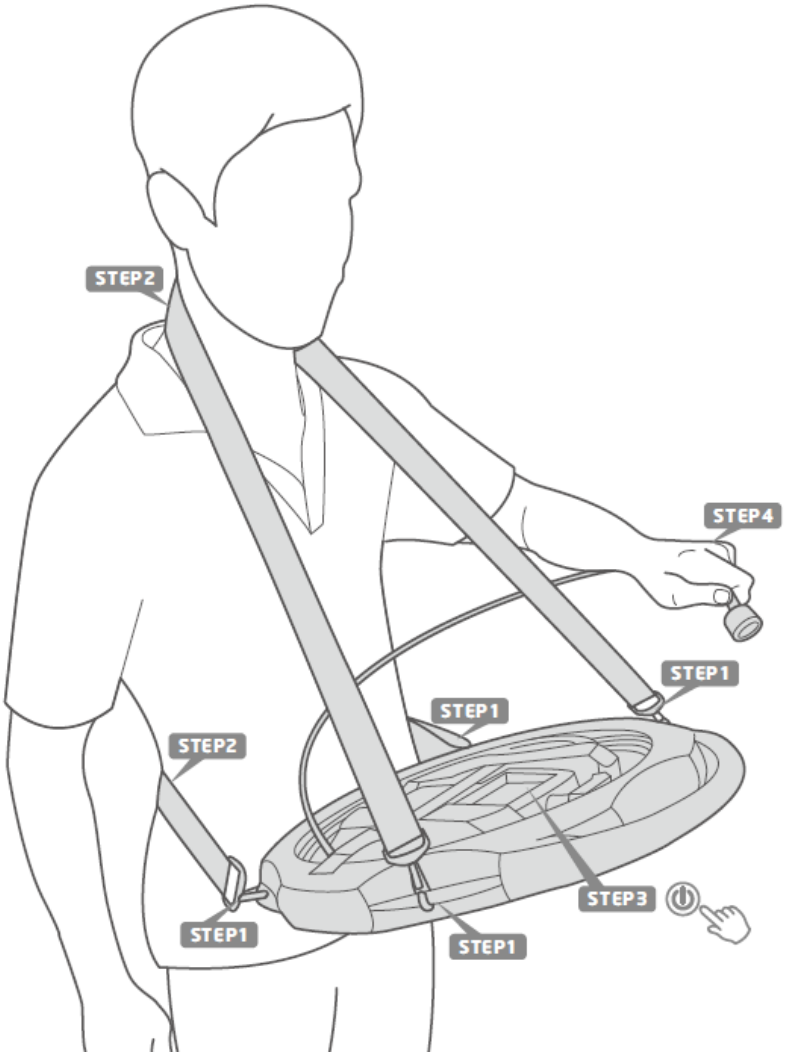

Step 1 / 2:

- Attach the neck strap to one of the upper supports, put it around your neck and attach the other end to the other upper support of the carrying system.
- Attach the hip belt to one of the lower supports, put it around your hip and attach the other end to the other lower support of the carrying system.

Step 3:

- Turn on the device.

Step 4:

- Unwind the camera tube until you have reached the desired length.

11 Disposal

For the disposal of batteries, the 2006/66/EC directive of the European Parliament applies. Due to the contained pollutants, batteries must not be disposed of as household waste. They must be given to collection points designed for that purpose.

In order to comply with the EU directive 2012/19/EU we take our devices back. We either re-use them or give them to a recycling company which disposes of the devices in line with law.

If you have any questions, please contact PCE Instruments.

12 Contact

If you have any questions about our range of products or measuring instruments please contact PCE Instruments.

12.1 PCE Instruments UK

By post:
PCE Instruments UK Ltd.
Units 12/13 Southpoint Business Park
Ensign Way, Southampton
Hampshire

United Kingdom, SO31 4RF

By phone:
02380 987 035

12.2 PCE Americas

By post:
PCE Americas Inc.
711 Commerce Way
Suite 8
Jupiter
33458 FL
USA

By phone:
561 3209162